1-3-1-9_ANT_CSFB_KR_EU_Global

Rev_0.3 Updated by TWHan 20130715 from CCDS

ANT1 (B1/2/3/4/5/8, GSM QUAD)

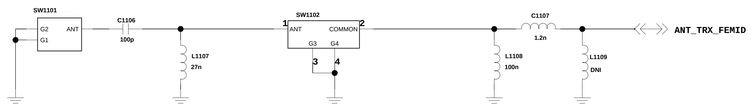

ANT3 MRD (B7,17,20)

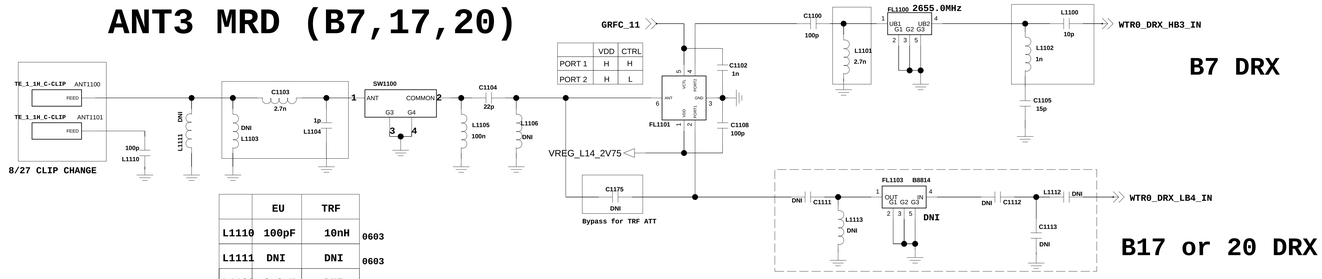

	EU	TRF	
L1110	100pF	10nH	0603
L1111	DNI	DNI	0603
L1103	2.2nH	DNI	1005
C1103	100pF	1nH	1005
L1104	DNI	4.7nH	1005

B17	EAM62930401
B20	EAM62930501

KOR : DNI

ANT2 (B7, B17, B20, B40)

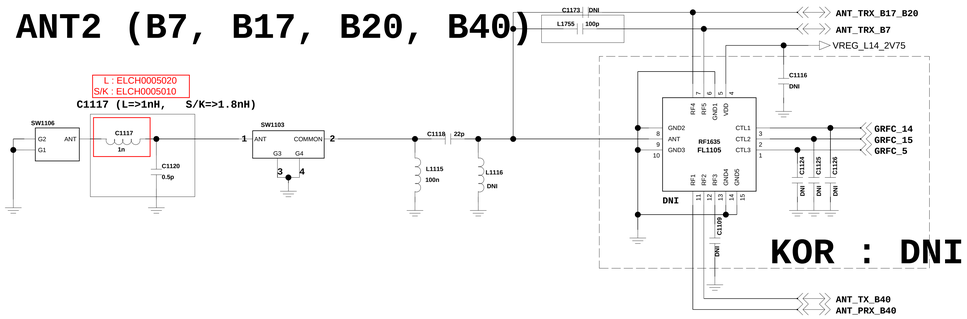

PATH	CTRL1	CTRL2	CTRL3
ANT-RF1	H	L	L
ANT-RF2	L	H	L
ANT-RF3	H	H	L
ANT-RF4	L	L	H
ANT-RF5	H	L	H

KOR : DNI

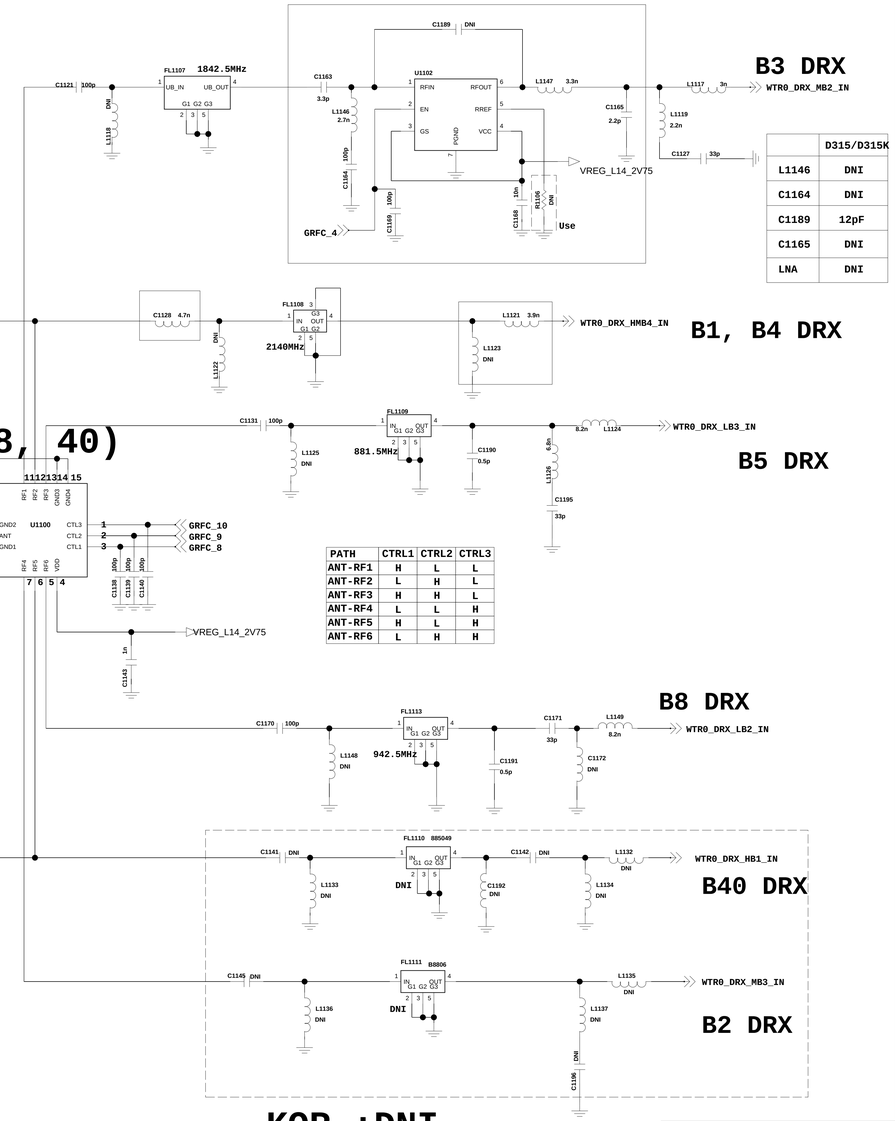

	D315/D315K
L1146	DNI
C1164	DNI
C1189	12pF
C1165	DNI
LNA	DNI

KOR :DNI

ANT4 MRD (B1/4, 2, 3, 5, 8, 40)

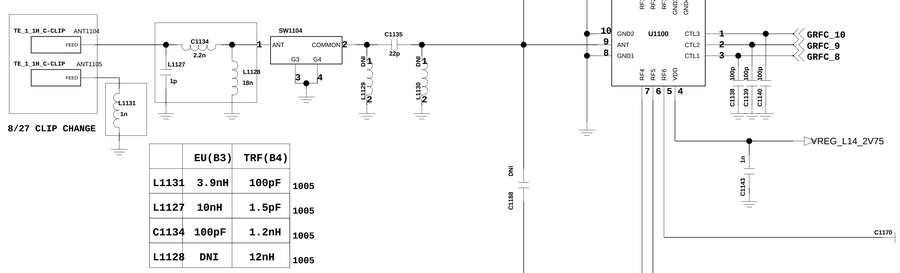

	EU(B3)	TRF(B4)	
L1131	3.9nH	100pF	1005
L1127	10nH	1.5pF	1005
C1134	100pF	1.2nH	1005
L1128	DNI	12nH	1005

PATH	CTRL1	CTRL2	CTRL3
ANT-RF1	H	L	L
ANT-RF2	L	H	L
ANT-RF3	H	H	L
ANT-RF4	L	L	H
ANT-RF5	H	L	H
ANT-RF6	L	H	H

Thermistor

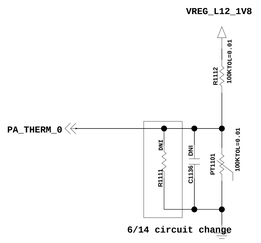

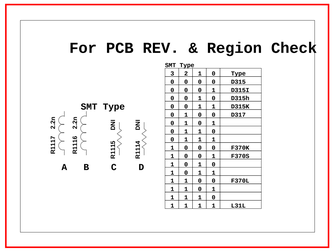

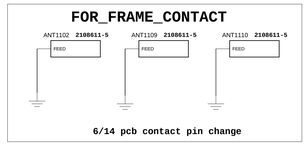

ANT5 (GNSS)

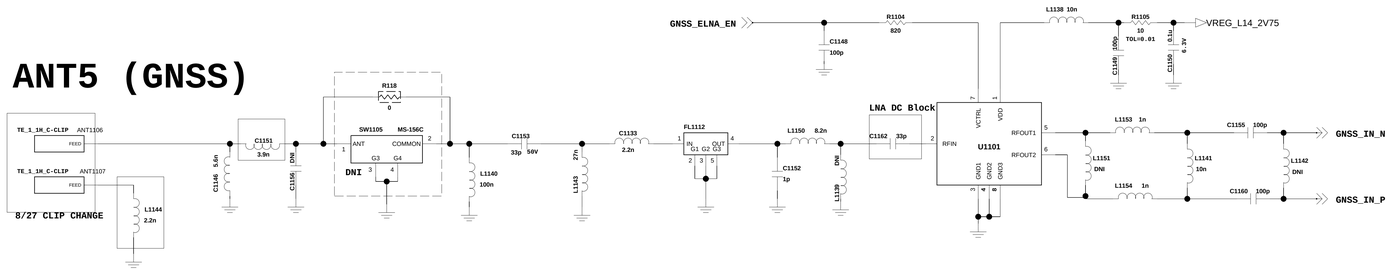

KOR :DNI

LG Electronics

TITLE: MODEL NAME

SIZE	DWG NO	REV
A2	PDM NUMBER	Rev

SHEET 1 OF 2 EDMS: LTE_GNSS_Diversity

DRAWN BY

LGE Internal Use Only

Rev_0.3

Updated by TWHan 20130715 from CCDS

< 1-3-3-1_HCPA_APT_ACPM7700 >

	EU(B3)	TRF(B4)
L1306	DNI	DNI
C1310	3.9nH	4.7nH
C1331	0.75pF	1pF

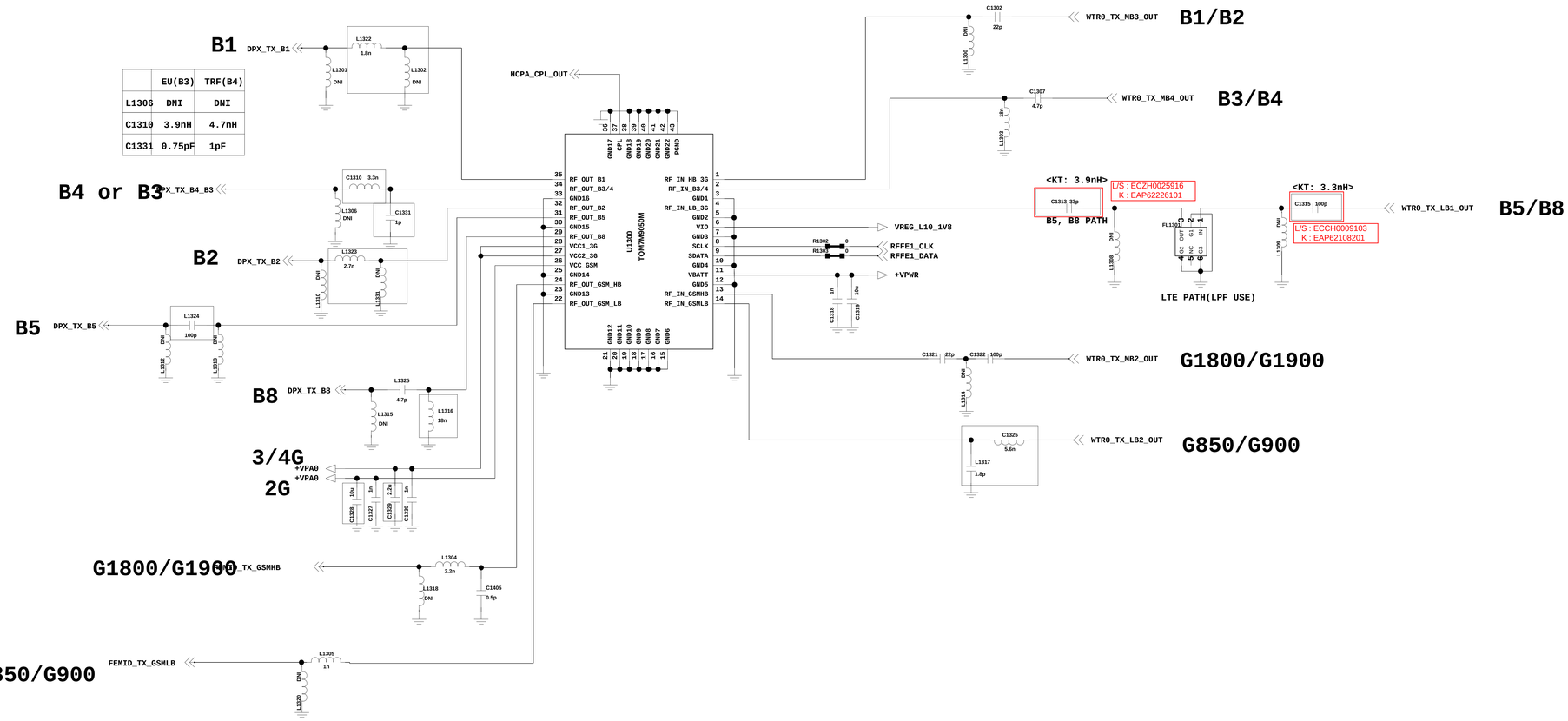

< 1-3-4-1_PT_APT_QFE1101 >

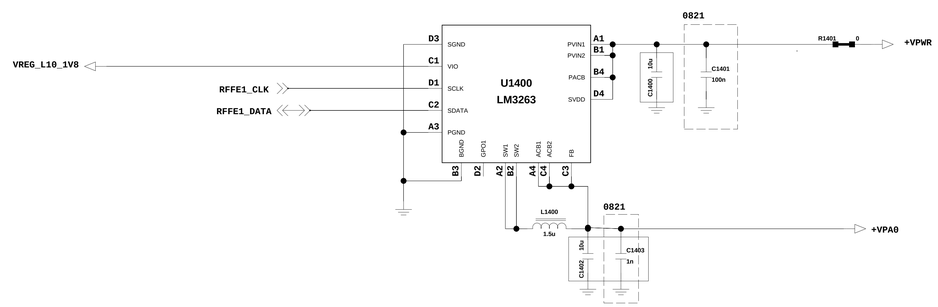

LGE Internal Use Only

LG Electronics

TITLE Schematic1

SIZE A2 | DWG NO PDM NUMBER | REV Rev

DRAWN BY User Name | SHEET 2_WLR1605L_WTR1605 | Drawing Date

<1-3-2-6_FEMID_nCA_KR_EU>

Rev_0.3

Updated by TWHan 20130715 from CCD

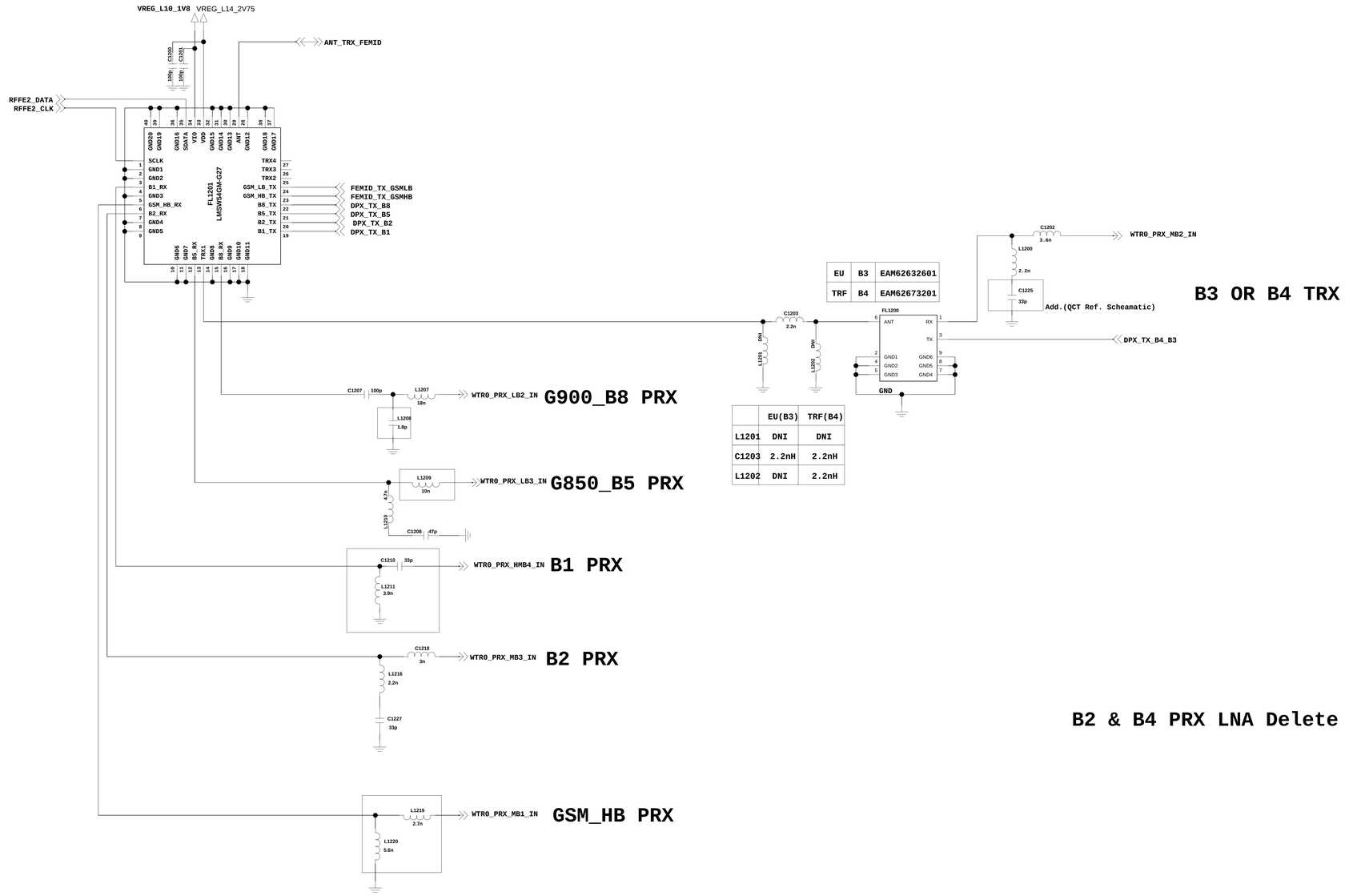

EU	B3	EAM62632601
TRF	B4	EAM62673201

	EU(B3)	TRF(B4)
L1201	DNI	DNI
C1203	2.2nH	2.2nH
L1202	DNI	2.2nH

B3 OR B4 TRX

B2 & B4 PRX LNA Delete by TW,Han 20130715

LGE Internal Use Only

LG Electronics

TITLE: RF_Module

SIZE: A2 | DWG NO: PDM NUMBER | REV: Rev

DRAWN BY: User Name | SHEET 38 OF 16 | Date: Drawing Date

< 1-3-6-7_TRX_B7 >

Rev_0.3

Updated by TWHan 20130715 from CCDS

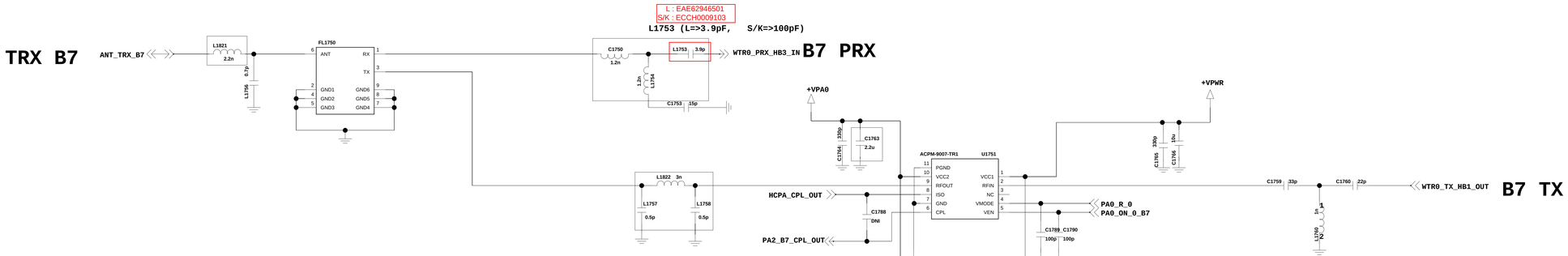

< 1-3-6-8_TRX_B40 >

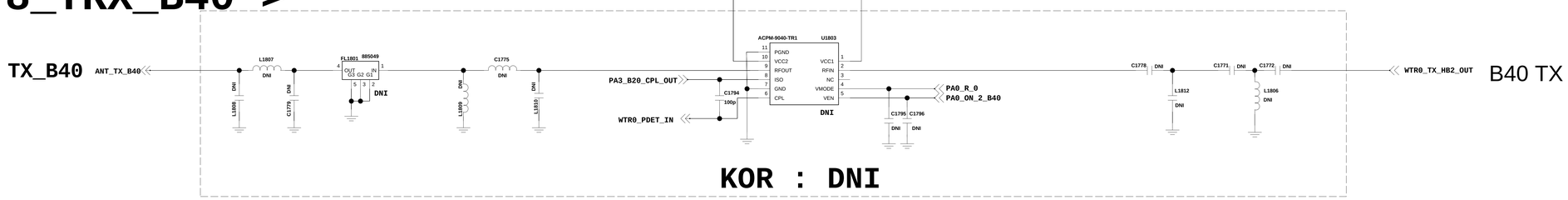

KOR : DNI

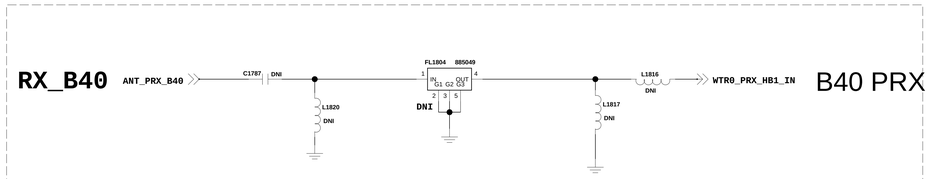

KOR : DNI

< 1-3-6-4_TRX_B17_B20 >

B17 or B20 PRX

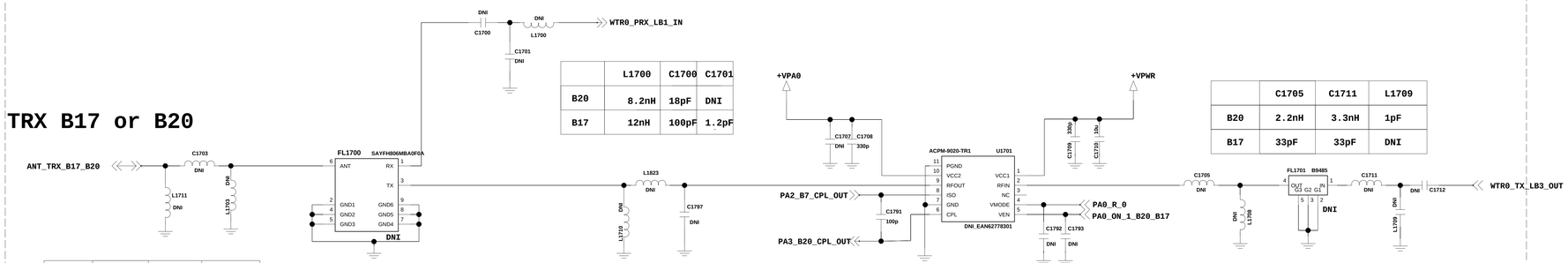

	L1700	C1700	C1701
B20	8.2nH	18pF	DNI
B17	12nH	100pF	1.2pF

	C1705	C1711	L1709
B20	2.2nH	3.3nH	1pF
B17	33pF	33pF	DNI

	L1711	C1703	L1703
B20	6.8nH	2.7nH	DNI
B17	DNI	100pF	12nH

EU	B20	EAM62870501
TRF	B17	EAM62870401

	L1710	L1823	C1797
B20	DNI	6.8nH	3.3pF
B17	1pF	8pF	33nH

EU	B20	EAM62778301
TRF	B17	EAN62785901

EU	B20	EAM62690401
TRF	B17	SFSY0041401

KOR : DNI

LGE Internal Use Only

LG Electronics

RFS_1-3-6-4_TRX_B17

TITLE: Schematic1

SIZE: A2 | DWG NO: PDM NUMBER | REV: Rev

DRAWN BY: User Name | SHEET 17 OF | Date: Drawing Date

< 1-3-5-1_RFIC_CA_nCA_WTR1625 >

Rev_0.3

Checked by TWHan 20130715 from CCDS

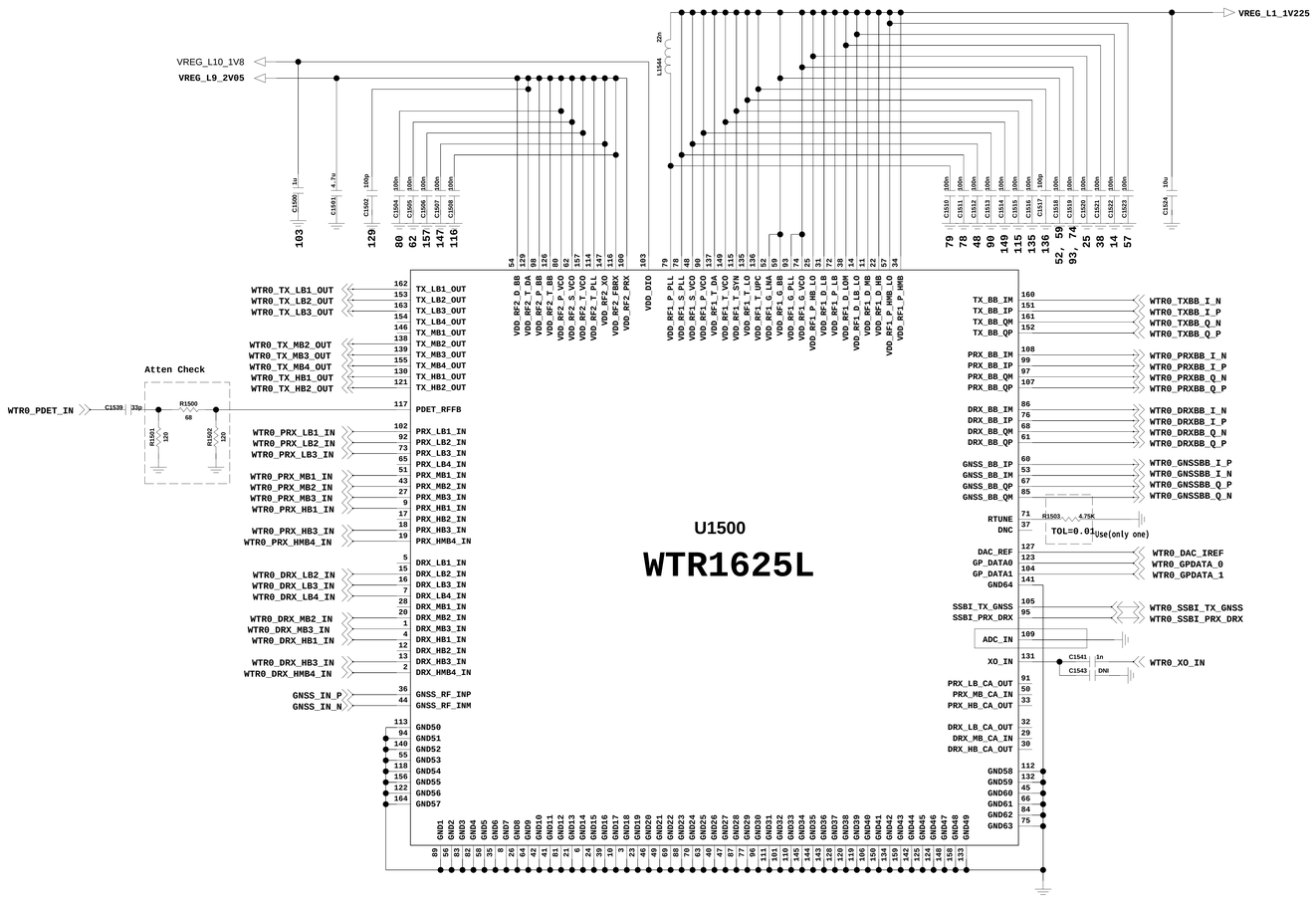

RF PORT MAP TABLE FOR WTR1625(L)+WFR2600 v01						
WTR1625 RF PORT MAPPING						
RF PORT	KR	DCM, KDDI	ATT_TMUS_SPC	EU_GLOBAL	VZW_USC	
TX_LB1_OUT	GSM_LB	GSM_LB	B5/26, BC0/10	B5/8, BC0	B5, B8	BC0
TX_LB2_OUT			GSM_LB	GSM_LB	GSM_LB	
TX_LB3_OUT	B17			B20		
TX_LB4_OUT	B5, B8	B6/18/19, BC0	B17		B12/13	
TX_MB1_OUT		B11/21		B34/39	B4	
TX_MB2_OUT	GSM_HB	GSM_HB	GSM_HB	GSM_HB	GSM_HB	
TX_MB3_OUT	B1, B2	B1, BC6	B1/2/25, BC1	B1/2	B1, B2	BC1
TX_MB4_OUT	B3, B4		B3/4	B3		
TX_HB1_OUT	B7	B41	B7	B7		
TX_HB2_OUT			B41	B38/40		
PRX_LB1_IN	850, B5	B6/18/19, BC0	B29	B20		
PRX_LB2_IN	900, B8	900	900	900, B8	B8, G900	
PRX_LB3_IN		850, B5/26, BC0/10		850, B5, BC0	B5, G850	BC0
PRX_LB4_IN	B17		B17		B12/13	
PRX_MB1_IN	B2	B11/21	B2/25, BC1	B2	B4	
PRX_MB2_IN	GSM_HB	GSM_HB	GSM_HB	GSM_HB	G1800	
PRX_MB3_IN			B3	B3	B2, G1900	BC1
PRX_HB1_IN		B41	B41	B38/40		
PRX_HB2_IN				B34/39		
PRX_HB3_IN	B7		B7	B7		
PRX_HMB4_IN		B1, BC6	B1/4	B1	B1	
DRX_LB1_IN	B8		B29	B20		
DRX_LB2_IN	B5	B18/19, BC0		B8		
DRX_LB3_IN			B5/26		B5	BC0
DRX_LB4_IN	B17		B17		B12/13	
DRX_MB1_IN		B11/21	B2/25, BC1		B4	
DRX_MB2_IN				B39		
DRX_MB3_IN			B3	B3	B2	BC1
DRX_HB1_IN			B41	B38		
DRX_HB2_IN				B40		
DRX_HB3_IN	B7		B7	B7		
DRX_HMB4_IN		B1, BC6	B1/4	B1		
WFR1620 RF PORT MAPPING						
RF PORT	KR	DCM, KDDI	ATT_TMUS_SPC	EU_GLOBAL		
PRX_MB1_IN			B2/25, BC1			
PRX_MB2_IN	B3		B3			
PRX_MB3_IN	B1/4		B1/4			
DRX_MB1_IN			B2/25, BC1			
DRX_MB2_IN	B3		B3			
DRX_MB3_IN	B1/4		B1/4			

LG Electronics

TITLE: MODEL NAME

SIZE: A2 | DWG NO: PDM NUMBER | REV: Rev

DRAWN BY: User Name | SHEET: 1_2_CDMA_LTE_GNSS_Diversity

LGE Internal Use Only

<5-2-1-4_NFC_PN547>

Modified 20130709 by Taiwoong Han. The value size changed from Platform

<5-2-1-4_NFC_PN547>
Rev_0.3

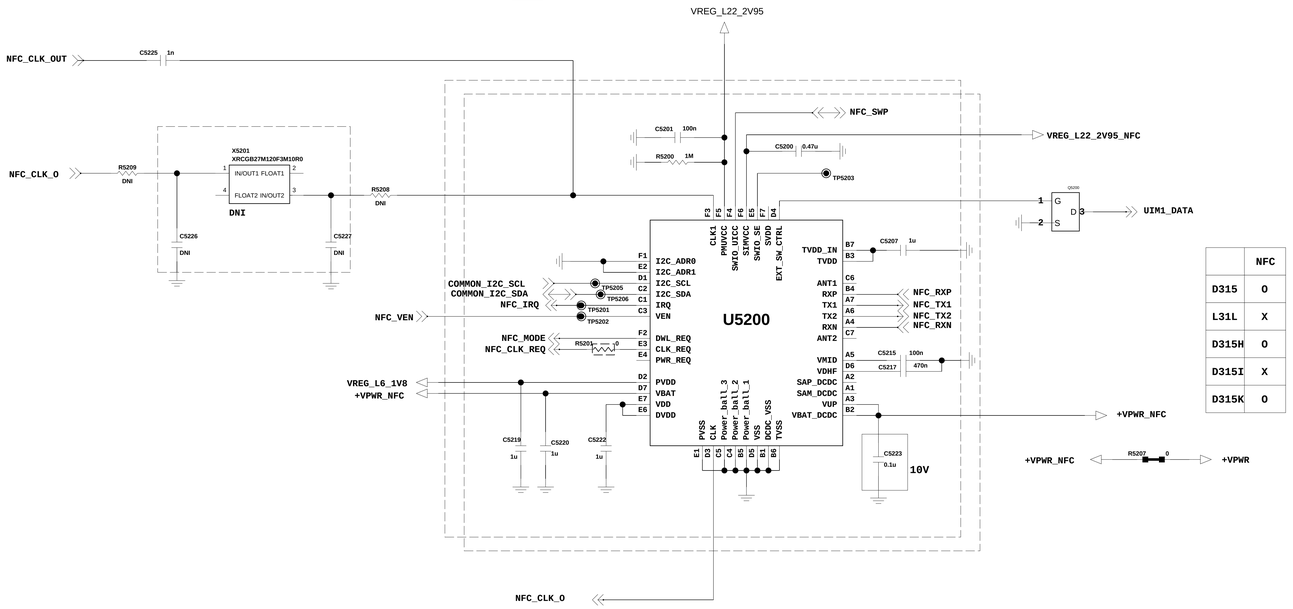

	NFC
D315	O
L31L	X
D315H	O
D315I	X
D315K	O

NFC Antenna

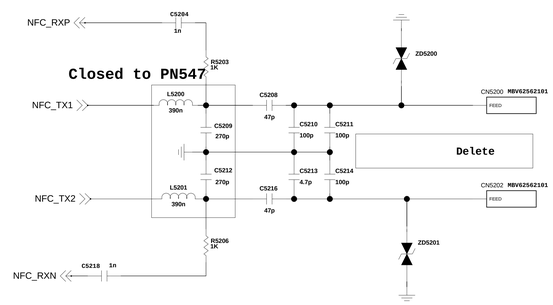

LGE Internal Use Only

LG Electronics

TITLE	W5		
SIZE A2	DWG NO PDM NUMBER		REV Rev
DRAWN BY User Name	SHEET 28 OF 28	Date Drawing Date	

<5-1-1-4> BT/WiFi Combo_WCN3620

REV.0.3

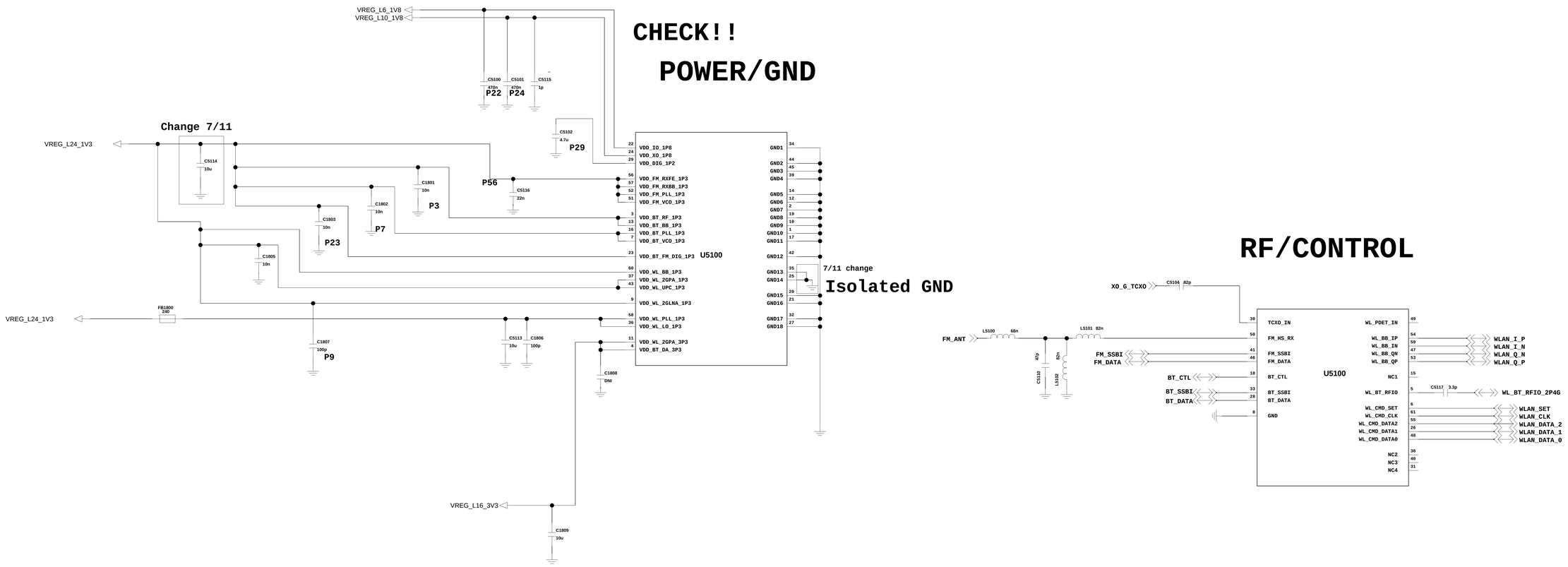

RF/CONTROL

RF Filter

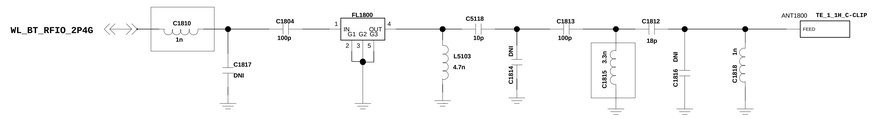

LGE Internal Use Only

LG Electronics	
TITLE	Schematic1
SIZE A2	DWG NO PDM NUMBER REV Rev
DRAWN BY User Name	SHEET PAGE6_BT2 Wi-Fi_WCN3620 of 1 DATE Date

<2-1-3-3-1_MSM8926_DATA>

Rev_0.3

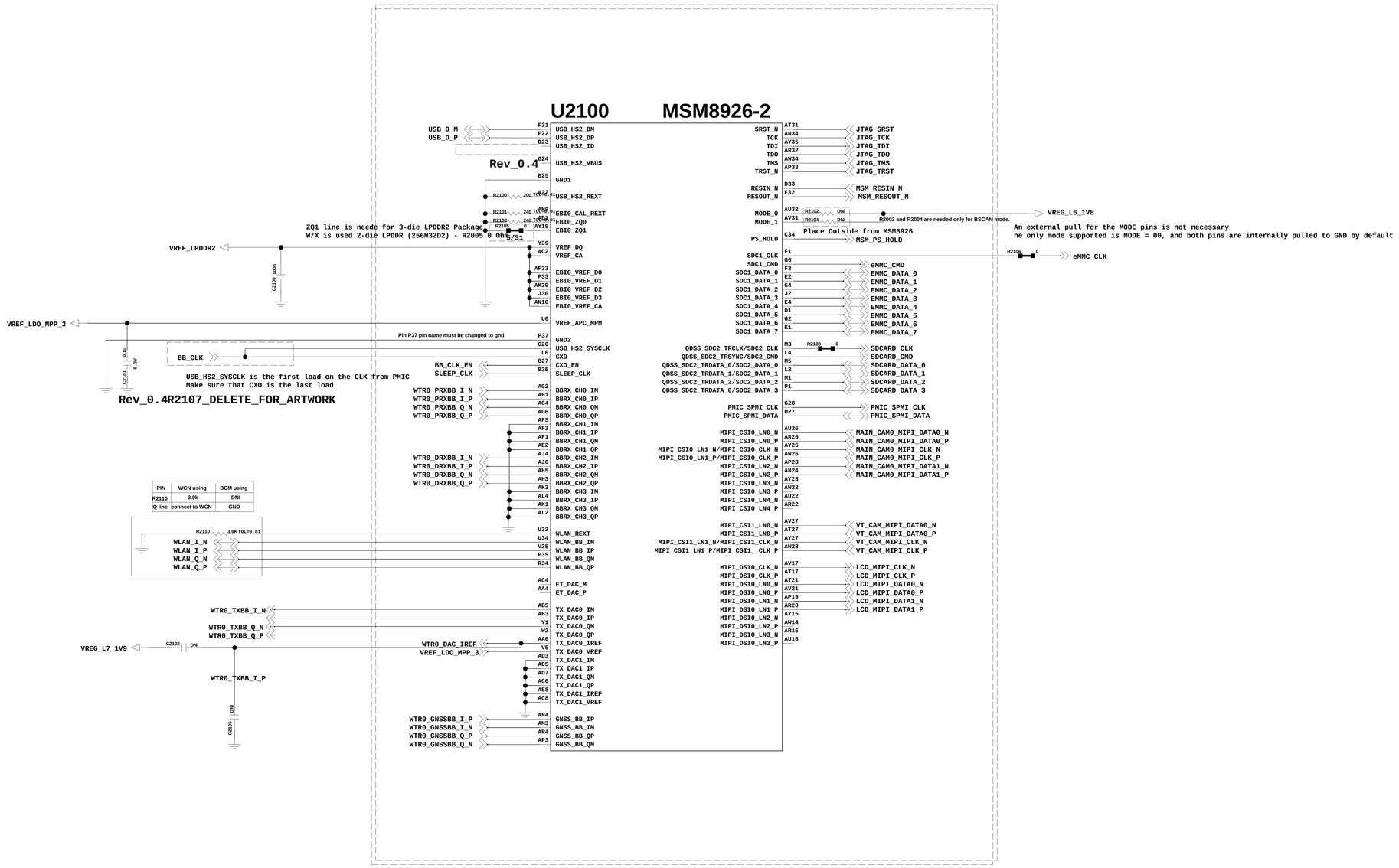

PIN	WCN using	BCM using
R2110	3.9k	DNI
IQ line	connect to WCN	GND

LGE Internal Use Only

LG Electronics

TITLE: Schematic1

SIZE	DWG NO	REV
A2	PDM NUMBER	Rev

DRAWN BY: User Name

SHEET: 2-1-1_MSM8974_DATA Drawing Date

<2-1-3-3-2_MSM8926_GPIO>

Rev_0.3

U2100 MSM8926-2

Pin	Signal	Net / Connection
F7	GPIO_0/BLSP1_3	
E6	GPIO_1/BLSP1_2	
D3	GPIO_2/BLSP1_1	
D5	GPIO_3/BLSP1_0	
F29	GPIO_4/BLSP2_3/UIM3_DATA	HALL_INT
F31	GPIO_5/BLSP2_2/UIM3_CLK	7/2 HALL_CRADLE_INT DEL
D35	GPIO_6/BLSP2_1	SENSOR0_I2C_SDA
C36	GPIO_7/BLSP2_0	SENSOR0_I2C_SCL
AE34	GPIO_8/BLSP3_3/SPI_CS1_N_BLSP1	MSM_UART_TX
AD33	GPIO_9/BLSP3_2/SPI_CS2A_N_BLSP1	MSM_UART_RX
AB37	GPIO_10/BLSP3_1	COMMON_I2C_SDA
AC34	GPIO_11/BLSP3_0	COMMON_I2C_SCL
AV37	GPIO_12/BLSP4_3	PCB_INDICATOR_0
AU38	GPIO_13/BLSP4_2/GP_PDM_2A	PCB_INDICATOR_1
AR36	GPIO_14/BLSP4_1	PCB_INDICATOR_2
AN36	GPIO_15/BLSP4_0	VREG_L6_1V8 R2215 10K
AV39	GPIO_16/BLSP5_3	TOUCH_INT_N
AP35	GPIO_17/BLSP5_2	8/8 GPIO_17 TOUCH_ATT NET -> TP for GFF
AY37	GPIO_18/BLSP5_1	TOUCH_I2C_SDA
AW36	GPIO_19/BLSP5_0	TOUCH_I2C_SCL
AT37	GPIO_20/BLSP6_3/GP_PDM_0A	
AU40	GPIO_21/BLSP6_2/GP_PDM_1B	NFC_VEN
AP37	GPIO_22/BLSP6_1/GP_MN/SPI_CS3_N_BLSP1	NFC_IRQ
AR38	GPIO_23/BLSP6_0/SPI_CS2B_N_BLSP1	NFC_MODE
AE40	GPIO_24/MDP_VSYNC_P	LCD_MAKER_ID
Y33	GPIO_25/MDP_VSYNC_S/GP_PDM_0B	LCD_VSYNC
AC36	GPIO_26/CAM_MCLK0	LCD_RESET_N
AB35	GPIO_27/CAM_MCLK1	MAIN_CAM0_MCLK
AD37	GPIO_28	VT_CAM_MCLK
AH39	GPIO_29/CCI_I2C0_SDA	VT_CAM_RESET_N
AG40	GPIO_30/CCI_I2C0_SCL	CAM0_I2C_SDA
AD35	GPIO_31/CCI_TIMER0	CAM0_I2C_SCL
AH35	GPIO_32/CCI_TIMER1	VT_CAM_PWDN
AJ36	GPIO_33/CCI_TIMER3/CCI_ASYNC1/GP_CLK0	FLASH_STROBE_TRIG
AJ40	GPIO_34/CCI_TIMER4/CCI_ASYNC2/GP_CLK1	D_IRRC_TXD
AK35	GPIO_35/CCI_ASYNC0	TOUCH_LDO_EN
AM35	GPIO_36	6/7 VCM LDO use MAIN_CAM0_VCM_PWDN
AR40	GPIO_37	SDCARD_DET
AL34	GPIO_38/CCI_TIMER2	FOR WCN BAT_ID
Y37	GPIO_39/SDC3_DATA_3/BT_SSBI	BT_SSBI
R40	GPIO_40/SDC3_DATA_2/WLAN_DATA_2	WLAN_DATA_2
N38	GPIO_41/SDC3_DATA_1/WLAN_DATA_1	WLAN_DATA_1
T39	GPIO_42/SDC3_DATA_0/WLAN_DATA_0	WLAN_DATA_0
V37	GPIO_43/SDC3_CMD/WLAN_SET	WLAN_SET
P39	GPIO_44/SDC3_CLK/WLAN_CLK	WLAN_CLK
AC38	GPIO_45/FM_SSBI	FM_SSBI
W40	GPIO_46/FM_SDI	FM_DATA
AD39	GPIO_47/BT_CTL	BT_CTL
AC40	GPIO_48/BT_DATA_STROBE	BT_DATA
L34	GPIO_49	
D37	GPIO_50	
A30	GPIO_51/UIM3_RESET	
B31	GPIO_52/UIM3_DET/GP_PDM_1A	
A8	GPIO_53/UIM2_DATA	UIM2_DATA
B9	GPIO_54/UIM2_CLK	UIM2_CLK
C10	GPIO_55/UIM2_RESET	UIM2_RESET_N
A10	GPIO_56/UIM2_DET	
C6	GPIO_57/UIM1_DATA	UIM1_DATA
A4	GPIO_58/UIM1_CLK	UIM1_CLK
B7	UIM1_RESET/GPIO_59	UIM1_RESET_N
C4	UIM1_DET/GPIO_60	TOUCH_RESET_N Rev.B (Knock on)
B3	UIM_BATT_ALARM/GPIO_61	BATT_UIM_ALARM
J38	GPIO_62	LDO1_EN Rev_0.4
H35	GP_PDM_2B/GPIO_63	
C38	GPIO_64	
D39	SPI_CS2_N_BLSP2/GPIO_65	
C40	GPIO_66	COMPASS_INT Rev.B (Knock on)
B29	GPIO_67	8/30 EAR_KEY delete
M35	GPIO_68	CODEC_INT
G34	GPIO_69	BMC150_INT_1 Rev.B (Knock on)
A28	SLIMBUS_CLK/GPIO_70	SLIMBUS_CLK
C28	SLIMBUS_DATA/GPIO_71	SLIMBUS_DATA
K35	GPIO_72	CODEC_RESET_N
AW10	GPIO_73	RFFE2_CLK
AY11	GPIO_74	RFFE2_DATA
AV11	GRFC_0/PA0_ON0/GPIO_75	PA0_ON_0_B7
AP15	GRFC_1/PA0_ON1/GPIO_76	PA0_ON_1_B20_B17
AU12	GRFC_2/PA0_ON2/GPIO_77	PA0_ON_2_B40
AN14	GRFC_3/PA0_ON3/GPIO_78	
AY9	GRFC_4/PA0_ON4/GPIO_79	GRFC_4
AT11	GRFC_5/PA0_ON5/GPIO_80	GRFC_5
AR12	GRFC_6/PA0_RANGE0/BOOT_CONFIG_0/GPIO_81	PA0_R_0
AP13	GRFC_7/PA0_RANGE1/BOOT_CONFIG_1/GPIO_82	
AW6	GRFC_8/ANT0_SW_SEL0/BOOT_CONFIG_2/GPIO_83	GRFC_8
AV7	GRFC_9/ANT0_SW_SEL1/BOOT_CONFIG_3/GPIO_84	GRFC_9
AR10	GRFC_10/ANT0_SW_SEL2/BOOT_CONFIG_4/GPIO_85	GRFC_10
AY5	GRFC_11/ANT0_SW_SEL3/SDC1_EMMC_1P2_EN/GPIO_86	GRFC_11
AV5	GRFC_12/TX_GRT_THRESH/GPIO_87	TX_GTR_THRESH
AT5	GRFC_13/ANT1_SW_SEL0/GPIO_88	
AR2	GRFC_14/ANT1_SW_SEL1/GPIO_89	GRFC_14
AP1	GRFC_15/ANT1_SW_SEL2/GPIO_90	GRFC_15
AN6	GRFC_16/PA1_ON0/GPIO_91	
T1	GRFC_17/PA1_ON1/GPIO_92	
AU6	GRFC_18/PA1_RANGE0/GSM0_TX_PHASE_D2/GPIO_93	
AR8	GRFC_19/PA1_RANGE1/GSM1_TX_PHASE_D2/GPIO_94	
AV3	GSM0_TX_PHASE_D0/GPIO_95	WTR0_GPDATA_0
AY1	GSM0_TX_PHASE_D1/GPIO_96	WTR0_GPDATA_1
AU4	GSM1_TX_PHASE_D0/GPIO_97	
AT3	GSM0_TX_PHASE_D0/GPIO_98	
AR6	RFFE1_CLK/GPIO_99	RFFE1_CLK
AT7	RFFE1_DATA/GPIO_100	RFFE1_DATA
U4	SSBI1_RFIC0/GPIO_101	WTR0_SSBI_PRX_DRX
U2	SSBI2_RFIC0/GPIO_102	WTR0_SSBI_TX_GNSS
T3	SSBI1_RFIC1/GPIO_103	
R2	GRFC_21/SSBI2_RFIC1/GPIO_104	
T5	GRFC_20/EXT_GNSS_LNA_EN/GPIO_105	GNSS_ELNA_EN
J40	GPIO_106	KEYPAD_SENSE_0
K39	GPIO_107	KEYPAD_SENSE_1
L40	GPIO_108	KEYPAD_SENSE_2
G40	GPIO_109	
C24	SPI_CS1_N_BLSP3/GPIO_110	KEYPAD_SENSE_3
D25	SPI_CS2_N_BLSP3/GPIO_111	LDO2_EN Rev_0.4
F25	SPI_CS3_N_BLSP3/GPIO_112	VT_CAM_MAKER_ID
C2	FORCED_USB_BOOT/GPIO_113	
C26	SPI_CS3_N_BLSP2/GPIO_114	MAIN_CAM0_RESET_N
T7	GPIO_115	
V1	GPIO_116	
W4	GPIO_117	
W6	GPIO_118	
C22	GPIO_119	PROXIMITY_INT
A24	GPIO_120	TOUCH_MAKER_ID

7/5 TOUCH_MAKER_ID DEL
X3 Incell TouchAge

TP2202

R2202 10K

R2200 DNI R2201 DNI

Pull-Down

R2216 DNI R2217 DNI

Pull-Down

7/4 DSV delete

R2205 DNI

PCB_Indicator

VREG_LVS1_1V8

R2220 DNI R2221 DNI R2223 DNI

R2219 DNI R2222 DNI R2224 DNI

PCB_INDICATOR_0
PCB_INDICATOR_1
PCB_INDICATOR_2

I2C Pull-Up

Sensors	VREG_LVS1_1V8	R2207 3.3K, R2208 3.3K	SENSOR0_I2C_SDA	SENSOR0_I2C_SCL
LCD Boost, Flash, NFC, Audio	VREG_L6_1V8	R2209 3.3K, R2210 3.3K	COMMON_I2C_SDA	COMMON_I2C_SCL
Touch	VREG_L6_1V8	R2211 3.3K, R2212 3.3K	TOUCH_I2C_SDA	TOUCH_I2C_SCL
Main CAM, VT CAM	+1V8_EXT_LDO4 (+1V8_CAM_VDDIO)	R2213 3.3K, R2214 3.3K	CAM0_I2C_SDA	CAM0_I2C_SCL

LGE Internal Use Only

LG Electronics

TITLE: Schematic1

SIZE: A2 | DWG NO: PDM NUMBER | REV: Rev

DRAWN BY: User Name | SHEET: 2-1-1_MSM8974_DATA | Drawing Date

<2-1-3-3-3_MSM8926_POWER>

Rev_0.3

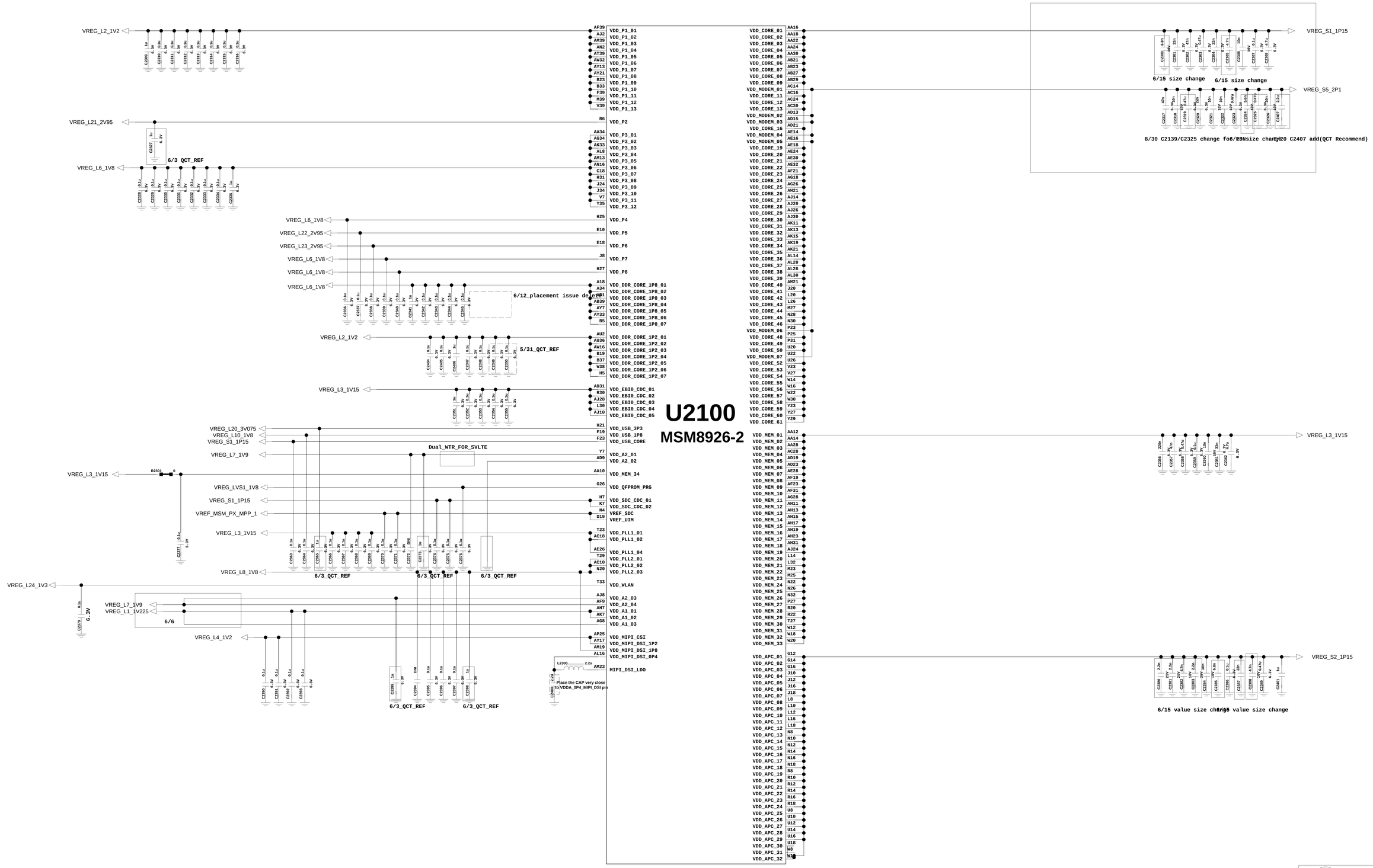

LGE Internal Use Only

LG Electronics

TITLE	Schematic1
SIZE	A2
DWG NO	PDM NUMBER
REV	Rev
DRAWN BY	User Name
SHEET	2-1-1_MSM8974_DATA Drawing Date

<2-1-3-3-4_MSM8926_GND_NC>

Rev_0.3

FOR_WCN3620

Connect K37 to GND when using WCN3620.

R2400, R2401 Deleted

Pin K37 pin name must be changed to WCN_XO

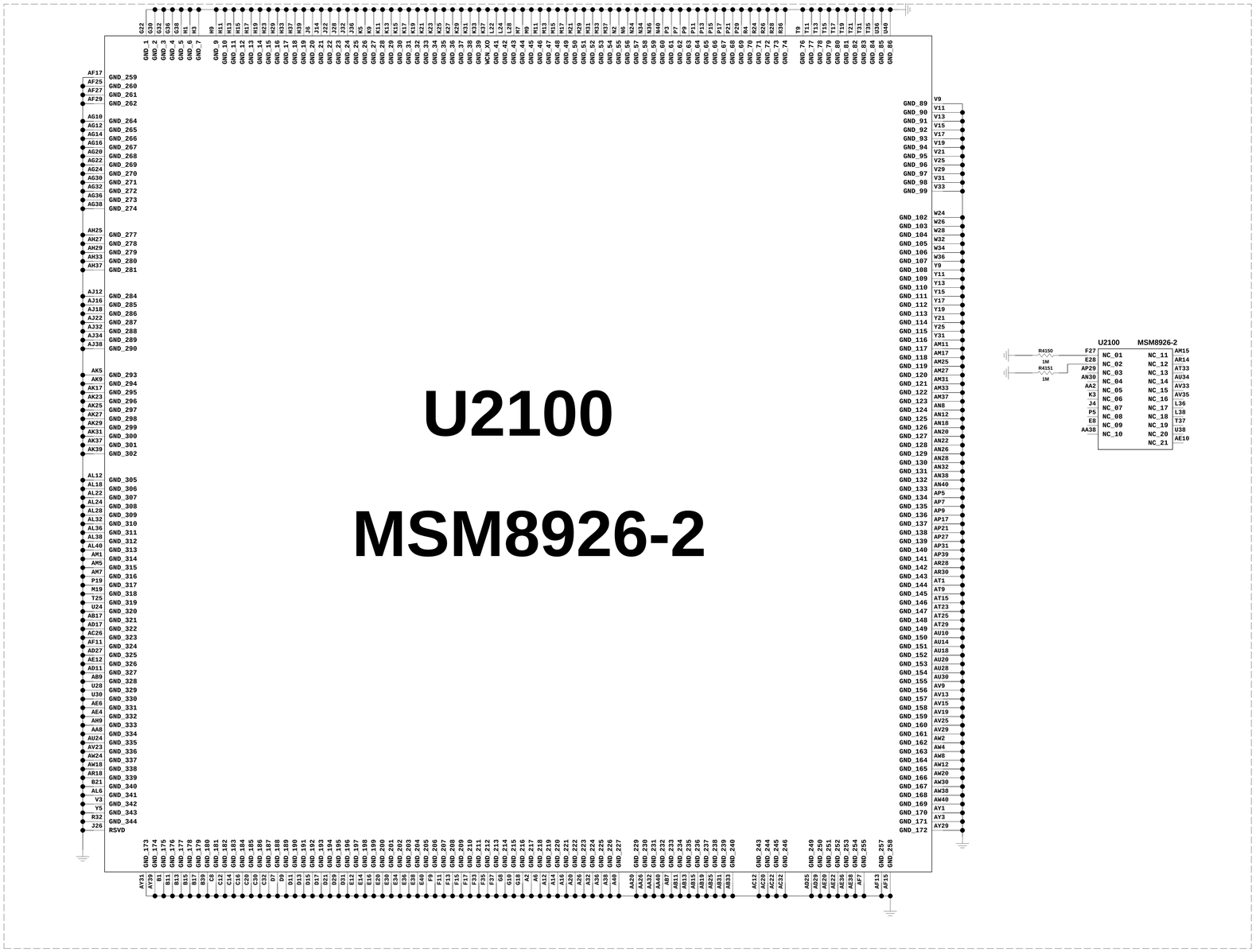

LGE Internal Use Only

LG Electronics

TITLE: Schematic1

SIZE	DWG NO	REV
A2	PDM NUMBER	Rev

DRAWN BY: User Name

SHEET: 2-1-1_MSM8974_DATA Drawing Date

<3-1-2-3-3_LPDDR2_POP_8Gbit_HYNIX>

Rev_0.3

< 3-2-2-1-1_eMMC_v4_5_4GB_SAMSUNG >

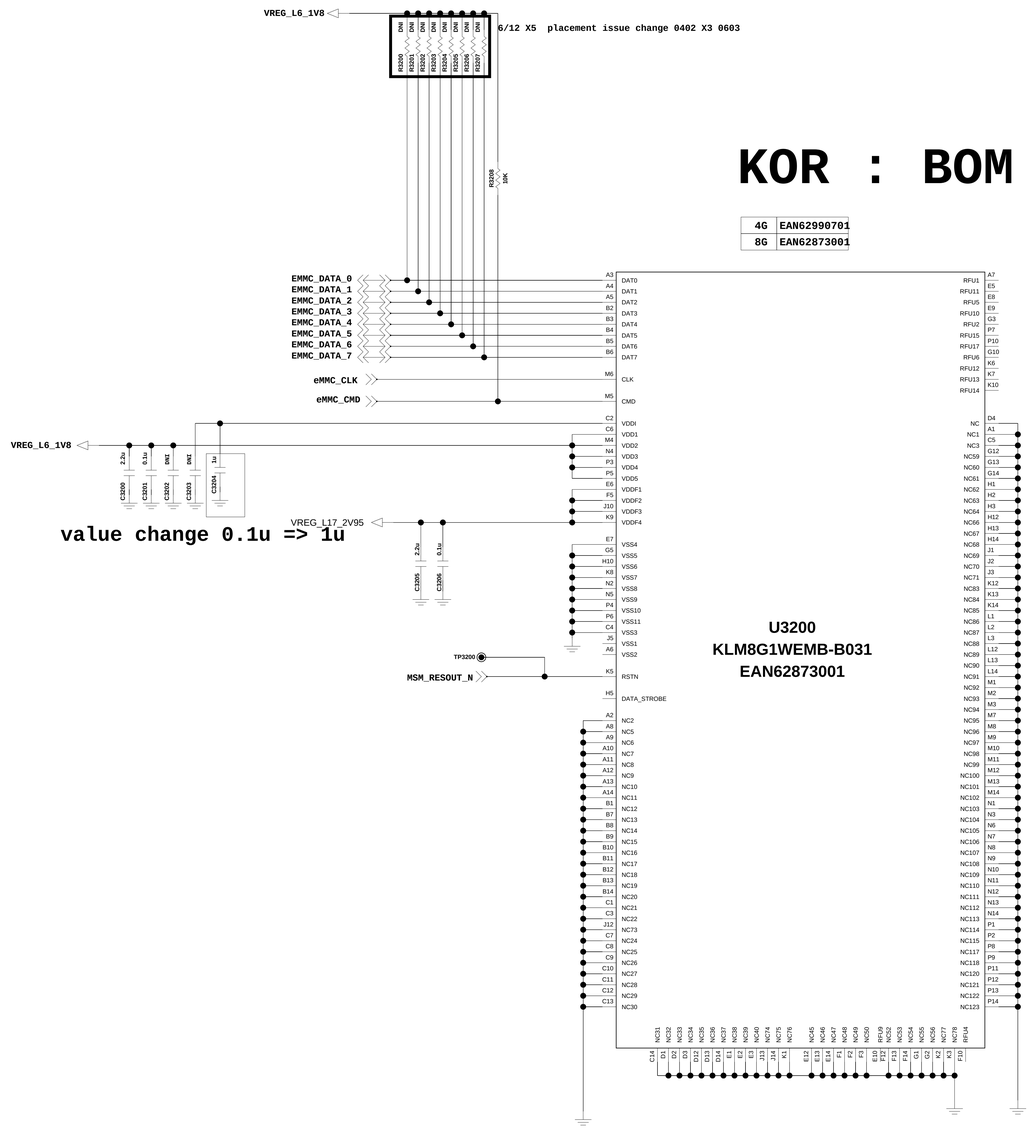

value change 0.1u => 1u

KOR : BOM (EAN62873001)

4G	EAN62990701
8G	EAN62873001

LGE Internal Use Only

LG Electronics

TITLE: Schematic1

SIZE: A2 | DWG NO: PDM NUMBER | REV: Rev

DRAWN BY: User Name | SHEET: 2-1-1_MSM8974_DATA | Drawing Date

< 4-1-3-1_PMIC_PM8926_DATA >

Rev_0.3

PCB REVISION

VREG_L12_1V8

PCB_REVISION — R4130 100K(1%+0) — R4131 DNI — C4130 33n 6.3V

Rev	R4130	R4131	
0	100K	20K	0.300
A	100K	30K	0.415
B	100K	43K	0.541
C	100K	68K	0.729
D	100K	100K	0.900
E	100K	180K	1.157
1.0	100K	DNI	1.800
1.1	DNI	100K	0.000

BACK_UP_BATT

Back_Up_Batt Deleted

VREG_L25_2V075 — R4145 0 — VREG_S4_2P1

L25 helper to S4
Current Assist when VBAT drops below 3V

8/20 R4100/R4101 delete

R4117 DNI

PM_KYPD_PWR_N
JTAG_PS_HOLD
MSM_PS_HOLD — TP4101 — R4104 10K — R4105 0
MSM_RESIN_N
PMIC_SPMI_CLK
PMIC_SPMI_DATA
BB_CLK
SLEEP_CLK
BB_CLK_EN
WTR0_XO_IN
XO_G_TCXO
BB_CLK
NFC_CLK_OUT
SLEEP_CLK
VREF_BAT_THERM
VREF_LPDDR2

VREG_L12_1V8 — 100K(1%)-0 — R4102 — R4103

X4100 X1E0002910001: Thermistor, XTAL2, XTAL1, GND/Therm — 19.2MHz

C4100 1n — BB_CLK has special layout and component requirements. Please refer to 80-NC833-14 for more information.

Ref.Schematic_change 50V

C4187 DNI — 5/31 — C4108 33pF — 33p

C4181 DNI — C4182 DNI

TP4102

R4110 0 — R4116 0 — 5/31

C4109 DNI — 8/20 C4109 add

GND_REF must connect directly to cap on a thin trace
The cap should via directly to main ground with
no connections to intermediate ground fills

C4106 0.1u 6.3V

U4100

Pin	Signal	Pin	Signal
85	CBL_PWR_N	124	GPIO_1
102	KPD_PWR_N	136	GPIO_2
108	OPT_2	149	GPIO_3
119	OPT_1	135	GPIO_4
100	PS_HOLD	148	GPIO_5
101	RESIN_IN	160	GPIO_6
77	PON_RESET_N	134	GPIO_7
		122	GPIO_8
112	SPMI_CLK	159	MPP_1
123	SPMI_DATA	146	MPP_2
120	XO_THERM	158	MPP_3
63	GND_XOADC	157	MPP_4
5	XTAL_19M_IN	132	MPP_5
6	XTAL_19M_OUT	144	MPP_6
		130	MPP_7
		141	MPP_8
62	GND_XO_BUFF	66	VIB_DRV_N
17	GND_XO	65	GND_DRV
44	BB_CLK1_EN	168	LED_CHG
13	RF_CLK1	72	AMUX_1
39	RF_CLK2	73	AMUX_2
31	BB_CLK1	97	USB_ID_IN
42	BB_CLK2		
88	SLEEP_CLK1		
169	VREF_BAT_THM		
61	VREF_LPDDR		
129	REF_BYP		
117	GND_REF		

PMIC_AUDIO_REF_CLK
EXT_OVP_CTRL
NFC_CLK_REQ
BATT_UIM_ALARM
FLASH_STROBE_TRIG
CABC_WLED
TX_GTR_THRESH
VREF_MSM_PX_MPP_1
VREF_LDO_MPP_3
PCB_REVISION
PA_THERM_0
PMIC_VIB_N
VBAT_THERM
PM_USB_ID — AMUX Input — R4111 0 — R4113 200K 1% — VREG_L12_1V8

R4160 0 — C4202 82p — R4149 10K DNI

40mA sink
5/10/15mA sink
5/10/15mA sink
7/18 HR_LED_SINK >0A

8/30 EAR_MIC_EN delete
8/30 EAR_MIC_JACK delete

PM_USB_ID was deleted for PA_THERM1 connection

5/31

EXTERNAL OVP Changed 0702

DNI
Q41100, Q4101, R4147, R4148

DNI_EBK62032201 — Q4101

Q4100 — EXT_OVP_CTRL — R4148 DNI — R4147 DNI — DNI_EBK62031701

C10002 1u 6V — R8302 47K

< 4-1-3-2_PMIC_PM8926_POWER >

VBUS_USB_IN
5/31 Shunt cap move to lower FPCB

+5V0_VREG_BHARGER — C4131 10n 16V — C4132 0.1u 10V

+5V0_VREG_BHARGER

+VPWR — L4133 1u — C4142 4.7u — C4143 4.7u

CHG_PGND

C4145 0.1u 25V

VBAT

VBAT_SENSE

6/12 BMS circuit change
VBAT_SENSE_P
VBAT_SENSE_N

+VPWR — 5/31 — C4146 470n 10V

+5V0_VREG_BHARGER

VREG_S3_1P35

VREG_S4_2P1
VREG_S4_2P1
+VPWR

+VPWR

If you don't use bypass Boost, Connect +VPWR

+VPWR

+VPWR — R4141 0

Current Sensing Point for WLED Driver

C4164 1u 10V — C4165 1u 10V — C4166 0.1u 6.3V — C4167 0.1u 10V — C4168 4.7u 10V — C4169 10u 10V — C4170 DNI — C4171 10u — C4172 10u — C4173 2.2u — C4174 2.2u 10V — C4175 2.2u 10V — C4176 2.2u 10V — C4177 2.2u 10V

7/14

QCT Ref.E (6/8) 6/13 voltage change

Each capacitor GND should be star routed to their respective reference ground (GND_S1, GND_S2, GND_S3, GND_S4)
Then input caps should via directly to main ground

8/20 C4172 추가

U4100

Pin	Signal	Pin	Signal
83	DNC_1	161	USB_IN_1
84	DNC_2	172	USB_IN_2
26	NC_1	171	OVP_CP_DRV
28	NC_2	162	OVP_OUT
49	NC_3	167	VDRV_P
54	NC_4	143	VCHG_1
82	NC_5	155	VCHG_2
89	NC_6	154	VSW_CHG_1
90	NC_7	166	VSW_CHG_2
91	NC_8	152	VPH_PWR_1
53	NC_9	164	VPH_PWR_2
133	NC_10	140	BATFET_CP_DRV
145	NC_11	139	VBAT_1
147		151	VBAT_2
		163	VBAT_3
		156	VBAT_SNS
		131	BMS_BYP
		107	BMS_CSP
		96	BMS_CSN
		76	VCOIN
		104	VDD_FLASH
		4	VDD_GR1
		1	VDD_GR2_1
		11	VDD_GR2_2
		27	VDD_GR3
		59	VDD_GR4
		60	VDD_GR5_1
		7	VDD_GR5_2
		41	VDD_GR6
		48	VDD_GR7
		58	VDD_L25
		121	AVDD_BYP
		170	VPRE_BYP
		9	VDD_S1_1
		10	VDD_S1_2
		22	GND_S1_1
		33	GND_S1_2
		34	VDD_S2
		57	GND_S2_1
		67	GND_S2_2
		68	GND_S2_3
		47	VDD_S3
		23	GND_S3
		93	VDD_S4
		69	GND_S4
		126	VDD_WLED
		113	GND_WLEDI_1
		114	GND_WLEDI_2
		79	VDD_S5
		92	GND_S5
150	GND_WLED	64	GND_1
115	GND_OVP	74	GND_2
142	GND_CHG	75	GND_3
109	GND_CHG_PSUB	80	GND_4
153	GND_CHG_HP_1	88	GND_5
165	GND_CHG_HP_2	98	GND_6
		99	GND_7
		105	GND_8
		111	

R8142 10K 1%

CHG_PGND

VSW_S1_1
VSW_S1_2
VREG_S1 — L4130 0.24u

Remote Sense R4132 0

VSW_S2_1
VSW_S2_2
VSW_S2_3
VREG_S2 — L4131 0.24u

Remote Sense R4133 0

VSW_S3
VREG_S3 — L4132 1u

VSW_S4
VREG_S4 — L4134 2.2u

VSW_S5
VREG_S5 — L4135 1u

VREG_S1_1P15
VREG_S2_1P15
VREG_S3_1P35
VREG_S4_2P1
VREG_S5_2P1

C4140 DNI — C4141 DNI — C4133 2.2u — C4134 2.2u — C4135 6.3V 2.2u — C4136 6.3V 4.7u — C4137 6.3V DNI — C4138 47u

Output capacitor should be placed close to MSM load
ground cap directly to main ground using separate via.
Main ground should be continuous (not fragmented) plane
between output capacitor and the PMIC

8/20 C4138/C4139 value change/delete

8/20 C4140 C4141 value change

VREG_L1
VREG_L2
VREG_L3
VREG_L4
VREG_L5
VREG_L6_1
VREG_L6_2
VREG_L7
VREG_L8
VREG_L9
VREG_L10
VREG_L11
VREG_L12
VREG_L13
VREG_L14
VREG_L15
VREG_L16
VREG_L17_1
VREG_L17_2
VREG_L18
VREG_L19
VREG_L20
VREG_L21
VREG_L22
VREG_L23
VREG_L24
VREG_L25
VREG_L26
VREG_L27
VREG_L28

VREG_L1_1V225
VREG_L2_1V2
VREG_L3_1V15
VREG_L4_1V2
VREG_L6_1V8
VREG_L7_1V9
VREG_L8_1V8
VREG_L9_2V05
VREG_L10_1V8
VREG_L12_1V8
VREG_L14_2V75
VREG_L15_2V9
VREG_L16_3V3
VREG_L17_2V95
VREG_L18_2V95
VREG_L19_2V85
VREG_L20_3V075
VREG_L21_2V95
VREG_L22_2V95
VREG_L23_2V95
VREG_L24_1V3
VREG_L25_2V075
VREG_L28_3V05
VREG_LVS1_1V8

VREG_L5 : 5M /VGA CAM not used

PMIC Internal Use for VREG_L6
PMIC Internal Use for VREG_RF_CLK

VOUT_LVS1

VSW_WLED
OVP_WLED — L4136 10u — ZD4130

WLED_1
VLED_FLASH

PMIC_LED_A
PMIC_LED_C
FLASH_LED_OUT_P

up to 10EA of LED

C4163 4.7u 50V

C4147 1u — C4148 2.2u — C4149 4.7u — C4150 4.7u — C4151 4.7u — C4152 1u — C4153 1u — C4154 1u — C4155 4.7u — C4156 4.7u — C4157 1u — C4158 4.7u — C4159 1u — C4160 4.7u — C4161 4.7u — C4162 4.7u — C4184 1u — C4187 1u — C4185 1u — C4188 1u — C4189 1u — C4190 1u — C4191 1u — C4192 1u — C4193 1u — C4195 1u — C4200 1u — C4201 1u

8/20 C4200/C4201 add

QCT REF

8/20 C4184 - C4193 value change
DNI --> 1uF

5/31 L15/19 1005 size ,ETC 0603 size

QCT_Check_List

LGE Internal Use Only

LG Electronics

TITLE: Schematic1

SIZE	DWG NO	REV
A2	PDM NUMBER	Rev

SHEET: 4711_PMIC_PM8226

DRAWN BY: User Name

Drawing Date

Rev_0.3

<9-1-2_Battery_CNT_4P>

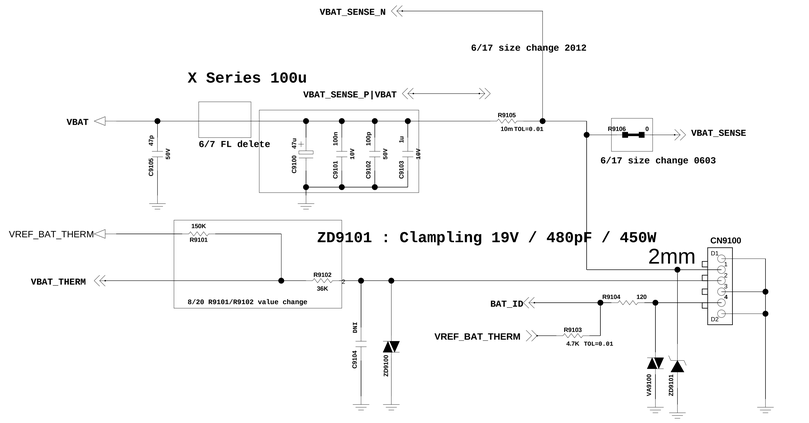

VA9100 : Clamping 20V / 50pF

LGE Internal Use Only

LG Electronics	
TITLE	MSM8926_X5_VZW
SIZE A2	DWG NO PDM NUMBER
REV Rev	
DRAWN BY User Name	SHEET 50 OF 38
Date Drawing Date	

Rev_0.3

< 6-1-1-1_Codec_WCD9302 >

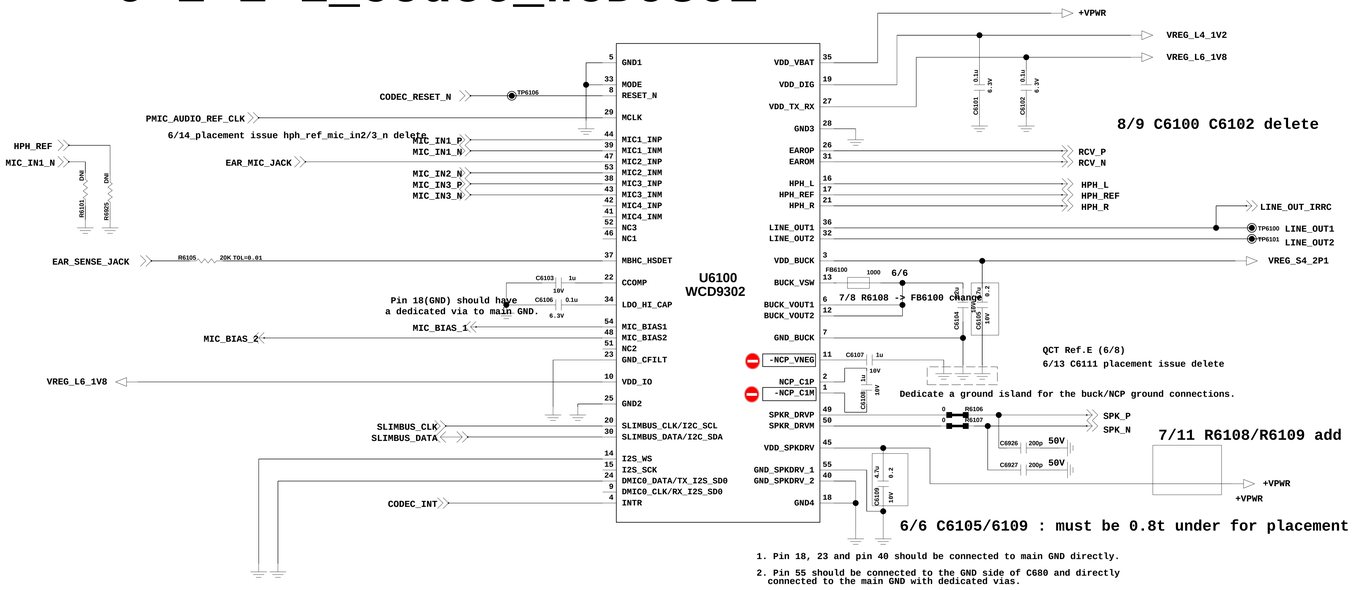

1. Pin 18, 23 and pin 40 should be connected to main GND directly.
2. Pin 55 should be connected to the GND side of C680 and directly connected to the main GND with dedicated vias.

< 6-8-1_Receiver_Only >

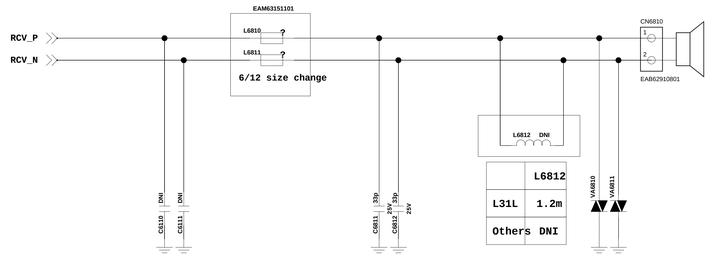

D6810-6811 : Clampling 12V / 6.5pF

< 6-6-1_Earjack >

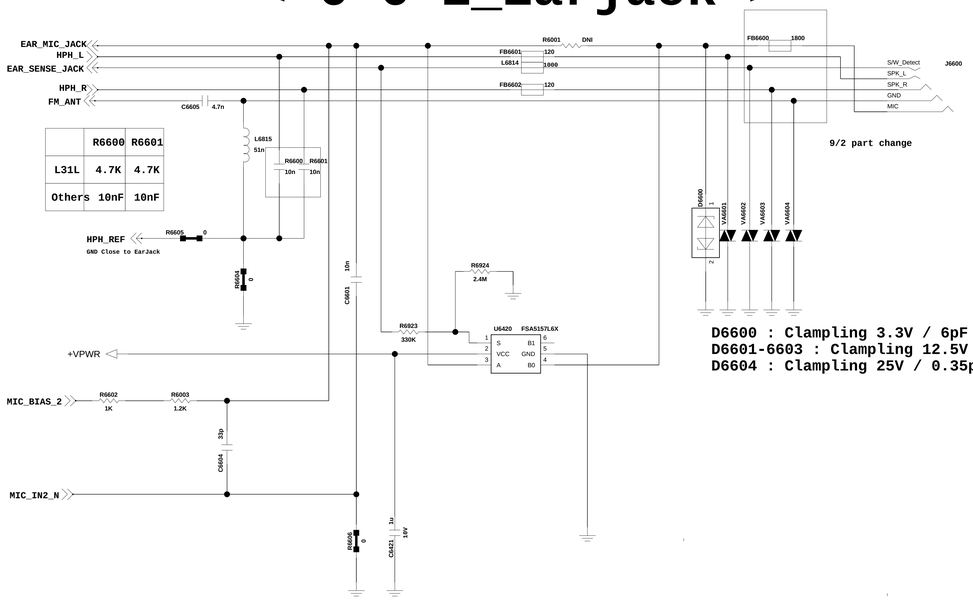

	R6600	R6601
L31L	4.7K	4.7K
Others	10nF	10nF

D6600 : Clampling 3.3V / 6pF
D6601-6603 : Clampling 12.5V / 15pF
D6604 : Clampling 25V / 0.35pF

< 6-9-2_2MIC >

SUB_MIC_LOWER_FPCB

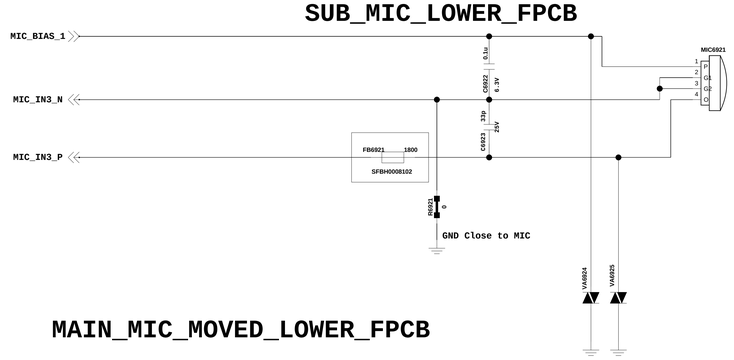

MAIN_MIC_MOVED_LOWER_FPCB

D6924-6925 : Clampling 12V / 6.5pF

Rev.B

LGE Internal Use Only

LG Electronics

TITLE	Schematic1
SIZE	A2
DWG NO	PDM NUMBER
REV	Rev
DRAWN BY	User Name
SHEET	1 OF 1
Date	Drawing Date

Rev_0.3

< 7-1-6-2-1_4.7"_qHD >

MODIFY New 4.5" WVGA GFF

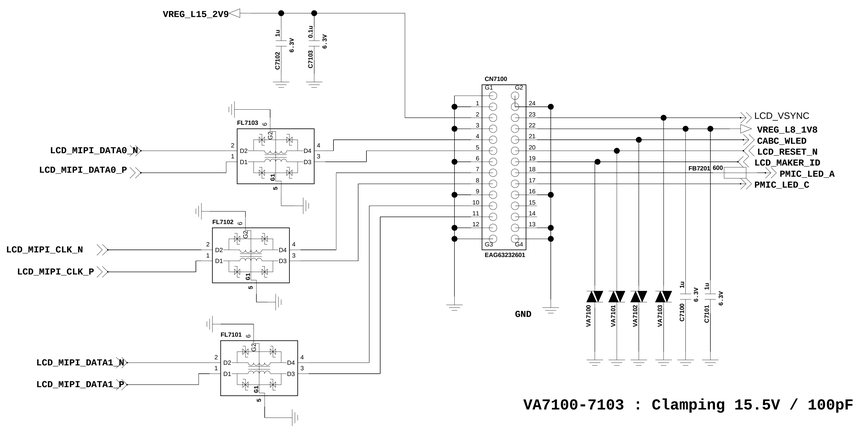

VA7100-7103 : Clamping 15.5V / 100pF

6/20 Filter change for CI

< 7-2-3_Touch CoB_S2202 >

TOUCH COB

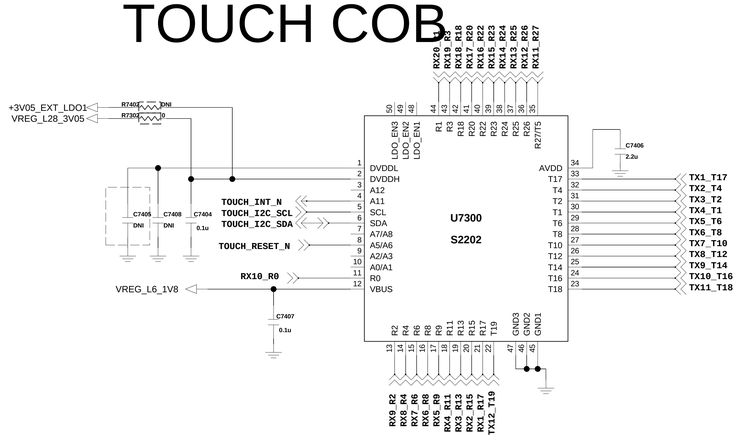

Touch Connector (B to B type)

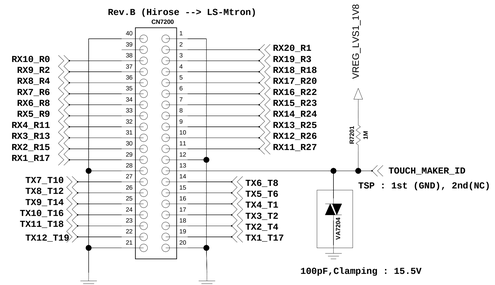

VT_MAIN_CAM_LDO1

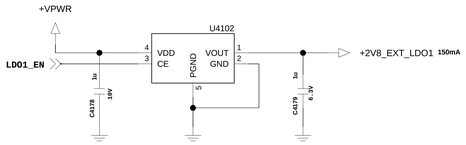

VT_MAIN_CAM_LDO2

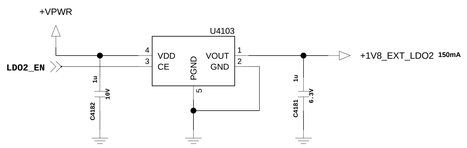

< 7-3-2_Main_Camera_24pin_5M_8M >

PART_CHANGE_FOR_PERFORMANCE

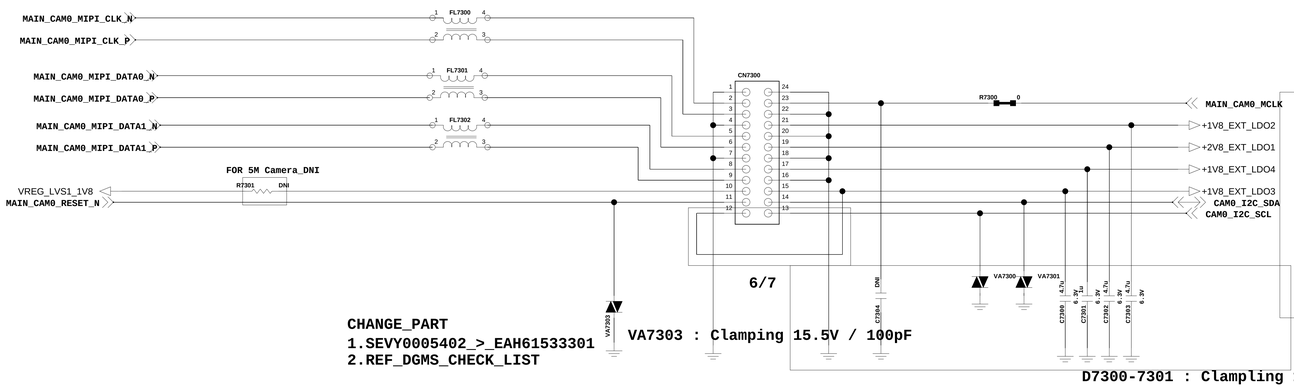

6/7

CHANGE_PART
1.SEVY0005402_>_EAH61533301
2.REF_DGMS_CHECK_LIST

VA7303 : Clamping 15.5V / 100pF

D7300-7301 : Clampling 12V / 6.5pF

VT_MAIN_CAM_LDO3

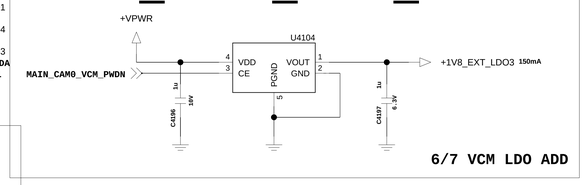

6/7 VCM LDO ADD

VT_MAIN_CAM_LDO4

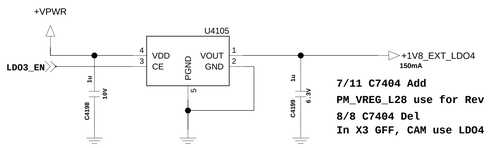

7/11 C7404 Add
PM_VREG_L28 use for Rev A CAM_IO
8/8 C7404 Del
In X3 GFF, CAM use LDO4

6/7 VCM LDO ADD

< 7-4-1_VT_Camera_20pin_VGA_1.26M_1.3M_2.4M>

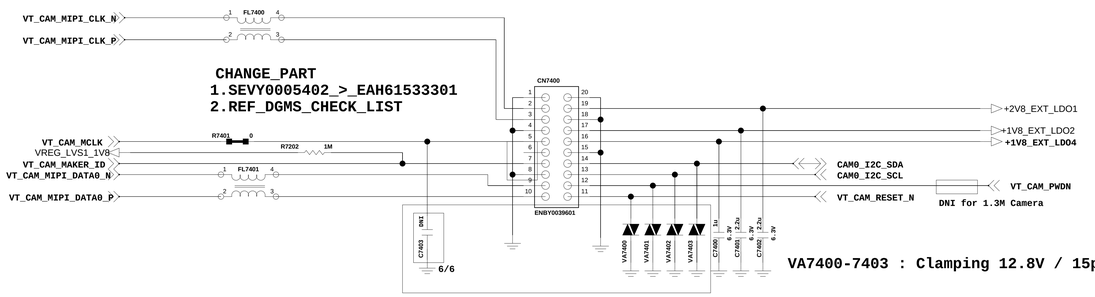

6/6

VA7400-7403 : Clamping 12.8V / 15pF / 50W

TOUCH_LDO

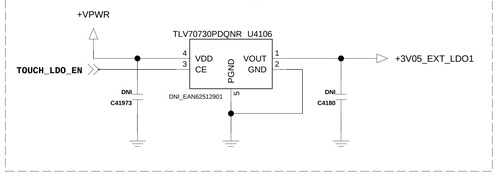

Touch External LDO DNI

DSV (TPS65132/EAN62731801)

<9-8-3_Flash_LED>

LED MODULE (LOW COST)

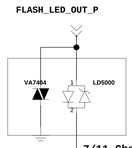

7/11 Change

LGE Internal Use Only

LG Electronics	
TITLE	MODEL NAME
SIZE A2	DWG NO PDM NUMBER REV Rev
DRAWN BY User Name	SHEET 1 OF 2 Date Drawing Date

Rev_0.3

<8-1-2-1_Accel_Compass_BMC150>

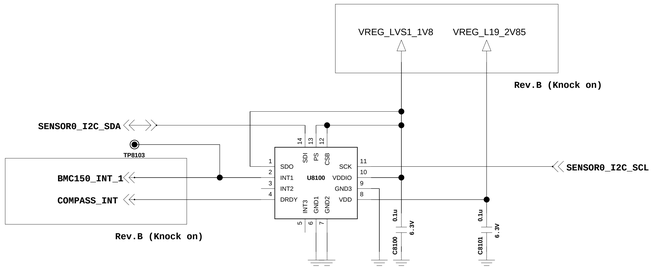

<8-4-1-1_Proximity_APDS-9130>

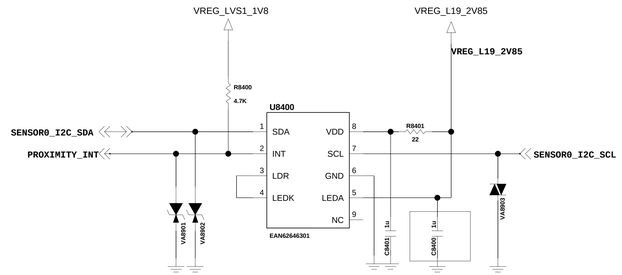

7/11 C8400 change

<8-7-1-2_Hall IC_X3>

X3 Chnage Hall IC

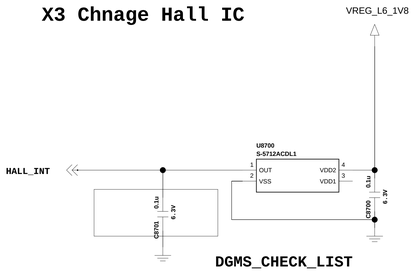

DGMS_CHECK_LIST

OUT1	OUTPUT (repond the south pole)
OUT2	OUTPUT (repond the north pole)

< 8-9-1-2_IRRC_w/o_driver_IC >

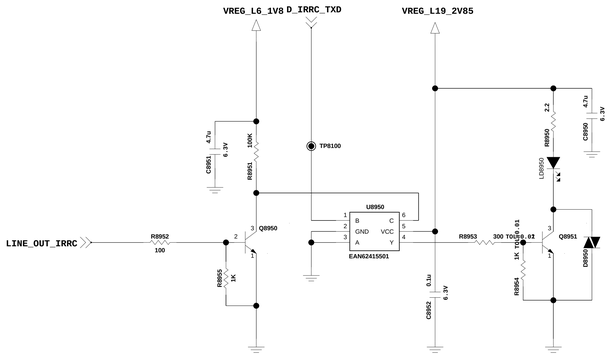

D8950 : Clamping 7.8V / 20pF / 100mW

LGE Internal Use Only

LG Electronics

TITLE	Schematic1
SIZE	A2
DWG NO	PDM NUMBER
REV	Rev
DRAWN BY	User Name
SHEET	12 OF 5
Date	Drawing Date

Rev_0.3

< 9-7-1_Power_Lock_Volume_Key >

< 9-3-1_JTAG >

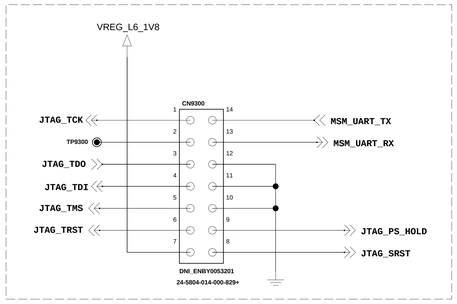

KOR : DNI

POWER & LOCK KEY

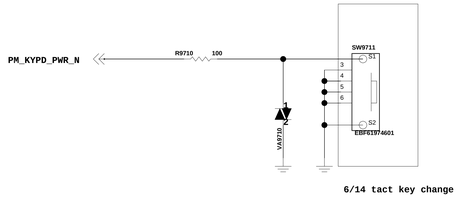

Vol. UP/DOWN

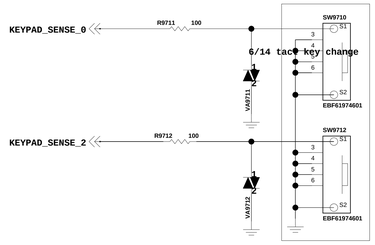

ZD9710,9711,9712 : Clamping 12.3V / 65pF / 150mW

< 9-7-4_Quick_Memo_Key_SW >

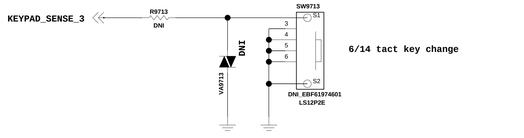

ZD9713 : Clamping 12.3V / 65pF / 150mW

KOR : DNI

< 9-5-3_Micro_SD_Combo >

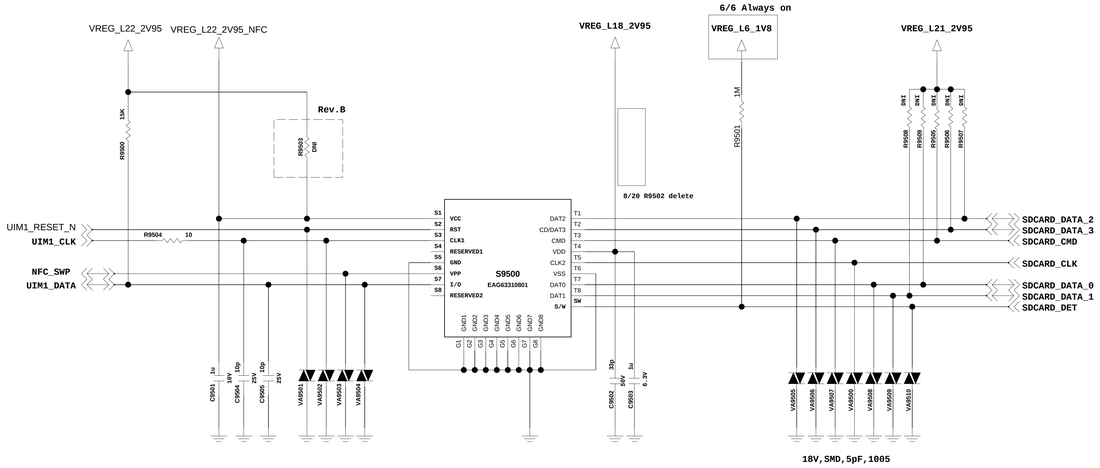

ZD9501,9510 : Clamping 15.5V / 100pF
ZD9500,9502-9509 : Clamping 12.8V / 15pF / 50W

Card Detect	SW1 SW2	SD_CARD_DET
Card Installed		GND
Card Not Installed		1.8V

Dual SIM (EU only)

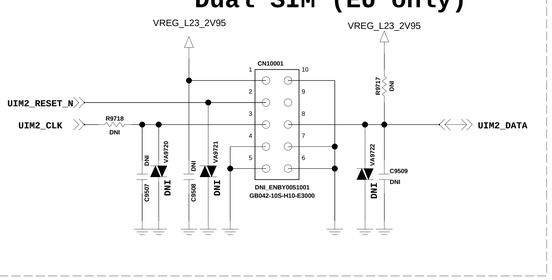

KOR : DNI

NFC_PN547(EU only)

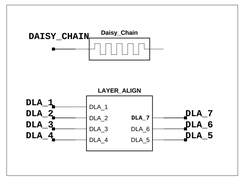

LOWER_FPCB_CON._MAIN

RevB

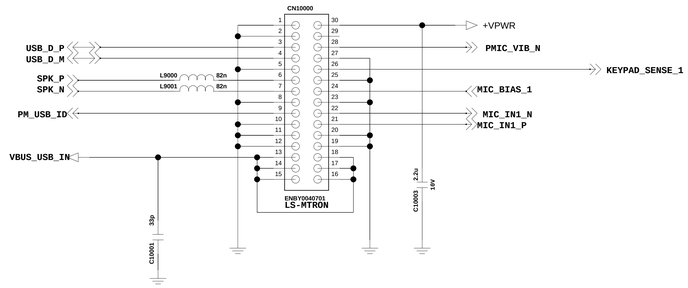

TOP_SHIELD_CAN_CLIP

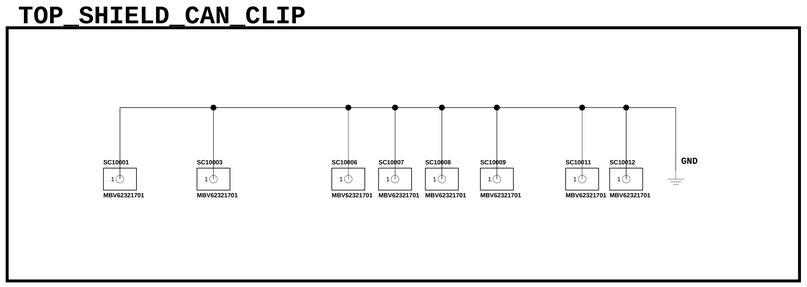

BOT_SHIELD_CAN_CLIP

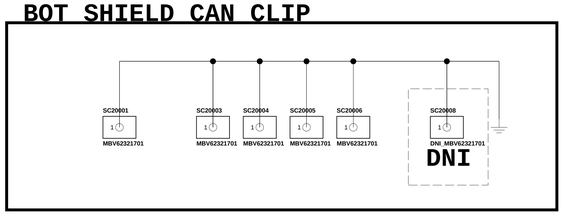

LGE Internal Use Only

LG Electronics

TITLE	Schematic1	
SIZE A2	DWG NO PDM NUMBER	REV Rev
DRAWN BY User Name	SHEET 1 OF 1	Date Drawing Date

< Lower FPCB >

FPCB_LOWER_ CONNECTOR(34->30PIN)

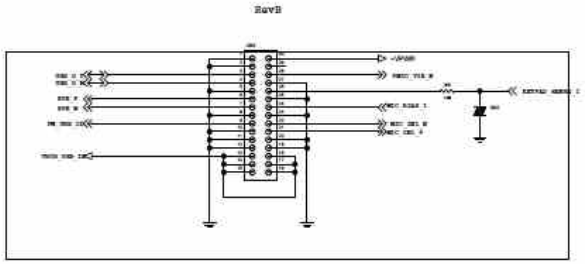

K-PJT conn(Hirose 0827)

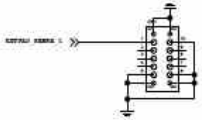

FPCB INDICATOR

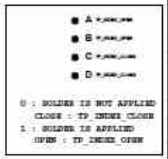

A	B	C	D	MODEL
0	0	0	0	D215
0	0	0	1	D215I
0	0	1	0	D215h
0	0	1	1	D215K
0	1	0	0	D217
0	1	0	1	
0	1	1	0	
0	1	1	1	
1	0	0	0	F370K
1	0	0	1	
1	0	1	0	
1	0	1	1	
1	1	0	0	F370L/F370M
1	1	0	1	
1	1	1	0	
1	1	1	1	L311

ANT2_CDMA

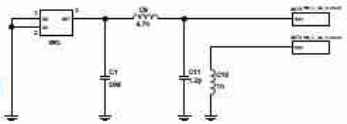

	C1	C9	C11	C10
EU	DNI	2.2nH	1.2pF	1nH
L31L	DNI	2.7nH	1.2pF	1.5nH

ANT1_LTE

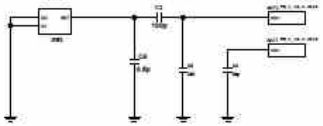

MAIN_MIC

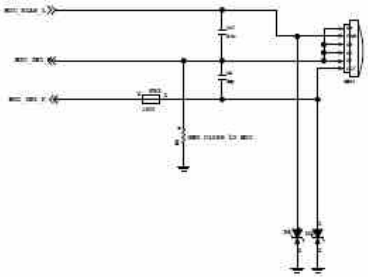

KEY LED

KEY LED Deleted

5PIN_MICRO_USB

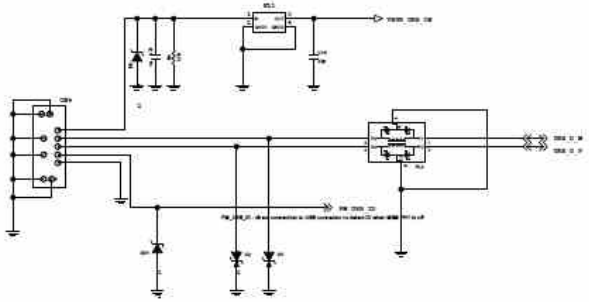

SPEAKER

7/25 PAD-->Speaker

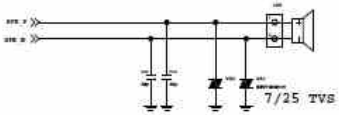

7/25 TVS ->VA

MOTOR

7/25 EAU62003401(LGIT) --> EAU61847901 (woosung)

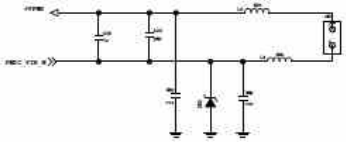

LG Electronics

Schematic1

LGE Internal Use Only

LGE Internal Use Only

Copyright © 2013 LG Electronics. Inc. All right reserved.
Only for training and service purposes

< K-PJT FPCB >

K-PJT CONNECTOR

change from HIROSE to KYOCERA(7/5)

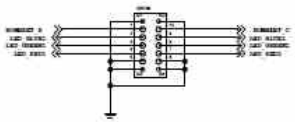

HOME_KEY

change from panasonic to citizen(7/4)

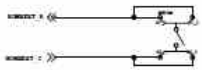

RGB LED

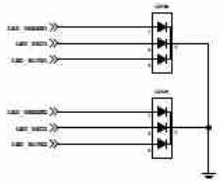

LG Electronics

Schematic1

A2

FORM NUMBER

LGE Internal Use Only

LGE Internal Use Only

Copyright © 2013 LG Electronics. Inc. All right reserved.
Only for training and service purposes